WATER HEATERS AND HOT WATER STORAGE TANKS

DRAŽICE

IT ALL BEGAN
WITH A SIMPLE IDEA

to produce the most cost-efficient and trouble-free water heater – the best storage heater. Every year, we think we are close enough to our goal. And yet, every year we produce more sophisticated water heaters, storage tanks and heating elements, ...

Maximum user comfort, energy efficiency and environmental responsibility are the main driving forces in our daily work.

CONTENT

ELECTRIC WATER HEATERS

8 WALL-MOUNTED VERTICAL
OKHE ONE | OKHE SMART | OKHE | OKCE | OKCE 2/6 kW | OKCE 2/4 kW | OKCE 2/2 kW

14 WALL-MOUNTED HORIZONTAL
OKCEV

15 NON-PRESSURE FLOW HEATERS
PTO | HA-DR

17 PRESSURE FLOW HEATERS
MX | HA-DR T

19 SMALL CAPACITY PRESSURE AND NON PRESSURE WATER HEATERS
TO 5 | TO 10 | TO 15 | TO 20.1 | CLOSE

ELECTRIC WATER HEATERS AND STORAGE TANKS

24 FLOOR-STANDING
OKCE S/2,2 kW

25 FLOOR-STANDING FOR INSTALATION ELECTRIC HEATING ELEMENT
OKCE S

COMBINED WATER HEATERS

30 WALL-MOUNTED VERTICAL
OKC

31 WALL-MOUNTED HORIZONTAL
OKCV

HOT WATER STORAGE TANKS

34 WALL-MOUNTED VERTICAL
OKC/1 m² | OKC/1 m² 2/6 kW | OKC NTR/Z

37 FLOOR-STANDING
OKCE NTR/2,2 kW

38 FLOOR-STANDING INDIRECT HEATING
OKC NTR/BP | OKC NTRR/BP | OKC NTR | OKC NTRR
OKC NTR/HV | OKH NTR/HV | OKC NTR/HP | OKC NTRR/HP/SOL

51 FLOOR-STANDING
OKC NTRR/SOL

52 WATER HEATER WITH HEAT PUMP
AQUA HP 250/2,2 KW

ACCESSORIES

58 EXPANSION VESSELS

59 IPS ProtectX | Protect CH

60 ORIGINAL PARTS FROM DRAŽICE

62 ACCESSORY TABLES

ANOTHER ASSORTMENT

66 PHOTOVOLTAIC

66 STORAGE TANKS

67 AIR-CONDITIONING - SPLIT AND MULTISPLIT

Tolerance of all stated dimensions complies with ČSN ISO 2768-c.
Note: * The value is derived by calculation ** For models 200 and 250, a 6 bar safety valve is included.

MAIN ADVANTAGES

RELIEF VALVE T-3160

The relief valve consists of a brass body (designed for contact with drinking water) without surface treatment and a replaceable head.

The point of contact between the body and the head is sealed with an O-ring made of EPDM rubber and secured against separation by a cotter pin made of corrosion proof steel.

The advantage of the T-3160 relief valve is the easy installation and replacement of the head without the need to replace the brass body. It has a removable safety part that can be purchased as a spare part at DZ Dražice company. It connects to an external thread, making it easy to connect to the system. The drain can be adjusted in any direction within 360°. Precise adjustment of the opening pressure is guaranteed.

Each valve has an non-interchangeable identification, which can be used to obtain feedback on the behaviour of the valve in operation, or used in a complaint.

CRYSTAL ENAMEL®

DZD water heaters and hot water storage tanks are protected inside by a unique Crystal Enamel anti-corrosion coating developed in cooperation with the German company Wendel. This layer is hygienically clean and therefore suitable for permanent contact with drinking water. Unlike the stainless steel, Crystal Enamel is resistant to pitting corrosion in the environment of hard and chlorinated water.

THERMO GEN®

Thermogen4 is the fourth generation of our exclusive insulating foam, which has been developed in cooperation with the company of Covestro, for attaining the most optimal heat- loss coefficients. The key here is a unique mixture tailor-made for our heaters. Its qualities are in line with all current and future trends in the field of heaters. It excels both in its insulating qualities as well as its shape integrity.Moreover, we are one of the first manufacturers in Europe able to meet the strictest ecological requirements of the EU, and thereby significantly contribute to protecting the atmosphere and the environment.

CERAMIC SOLUTION®

The Ceramic Solution electrical heating unit is exceptionally resistant to hard and aggressive water and significantly extends the life of the water heater and storage tank under any conditions. This ensures the long-term stable performance of the heater system due to reduced limescale. DZD is a pioneer in this water heating solution; they have been using it in their products for over 50 years.

Legend to

ICONS

INLETS

OUTLETS

INSTALLATION

- Gas boiler
- Solid fuel boiler
- Biomass boiler
- Fireplace insert
- Electric heating – dry ceramic electrical heating unit TPK
- Electric heating – wet electrical heating unit TJ 6/4"
- Electric heating – series R, SE electrical heating unit
- Electrical heating unit (part of the product)
- Heat pump
- Photothermic solar power system
- Photovoltaic solar power system
- Hot water
- Universal bracket

DRAŽICE

ELECTRIC WATER HEATERS

WALL-MOUNTED VERTICAL

WALL-MOUNTED HORIZONTAL

LOW-PRESSURE FLOW HEATERS

PRESSURE FLOW HEATERS

LOW-CAPACITY PRESSURE
AND LOW-PRESSURE STORAGE TANKS

OKHE ONE	ELECTRIC WATER HEATERS	WALL-MOUNTED VERTICAL

- New flat heater in models 20–120
- Suitable for installation in restricted areas, it can be built in the kitchen line; **Horizontal installation possible by models 30 and bigger**
- Quick water heating due to the concept of two vessels
- It combines the traditional DZD technology and modern design
- Possible alternatives to the replacement of the gas heater
- The option of purchasing 2 multipurpose holders (order number 102000703)
- New flexible wall hinge available (4 mounting buttons)
- New electronic thermostat

OKHE ONE 20

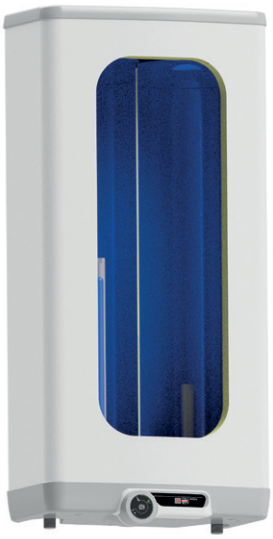

OKHE ONE/E 30–120

Video tutorials:

replacing the original heater | directly on the wall | with a universal hinge, width of the groove on M6 screw | on M8 screw | with 4 flexible brackets

Type of storage tank		OKHE ONE 20	OKHE ONE/E 30	OKHE ONE/E 50	OKHE ONE/E 80	OKHE ONE/E 100	OKHE ONE/E 120
Order number		180210801	1811108101	1805108101	1801108101	1808108101	1803108101
Capacity	[l]	20	28	41	65	80	98
Max. weight of the empty water heater	[kg]	17	22	31	46	55	62
Insulation thickness	[mm]	min. 41	min. 33				
Thermal conductivity of the insulation	[W•m^{-1}•K^{-1}]	0,022					
Power consumption of the el. heating unit	[W]	2200	1100	2000			
Heating time from 10 °C to 60 °C	[h]	0,5	1,5	1,5	2	2,5	3
Electrical connection		1/N/PE ~ 230V/50Hz					
Recommended circuit breaker size	[A]	16					
Degree of protection		IP44					
Max. operating temp. / overpressure in tank	[°C]/[bar]	80/6					
Energy efficiency class		A	C				
Annual consumption	[kWh•a^{-1}]	485	561	1353	1378	1405	1403
Mixed water V40	[l]	26,14	39,37	72,16	88,77	113,12	118,16

Dimensions [mm]	A	B	D	E	F	H	K	R
OKHE ONE 20	545	301	523	356	–	235	120	180
OKHE ONE/E 30	617	318	523	500	350	110	110	180
OKHE ONE/E 50	845	318	523	730	560	110	110	180
OKHE ONE/E 80	1112	318	523	920	750	190	110	180
OKHE ONE/E 100	1327	318	523	1135	950	190	110	180
OKHE ONE/E 120	1552	318	523	1360	1150	190	110	180

SOCKET no. 1 1/2" outer

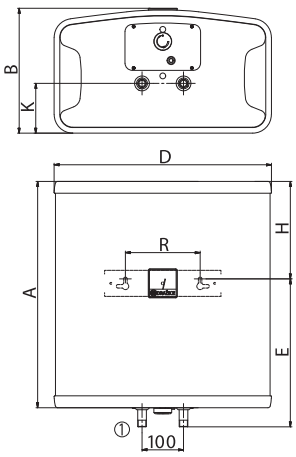

OKHE ONE 20

SOCKET no. 1 3/4" outer

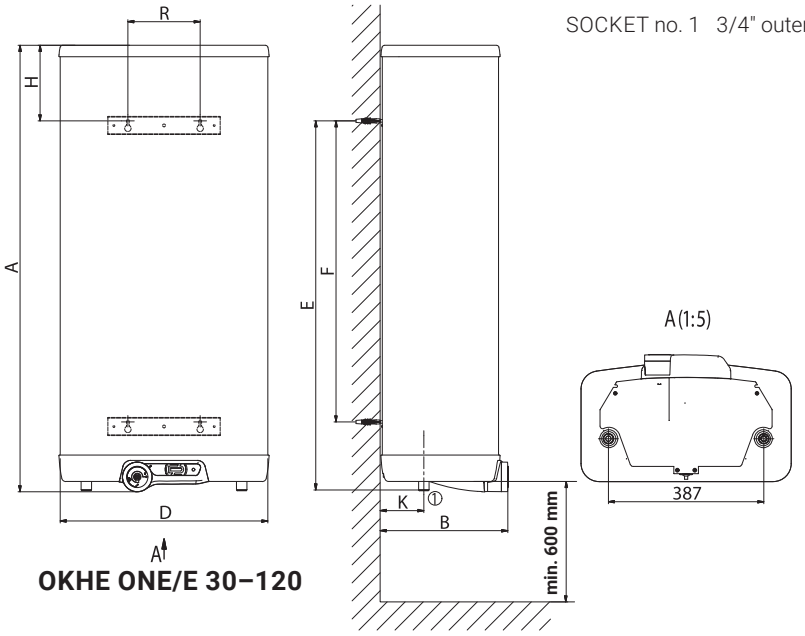

OKHE ONE/E 30–120

OKHE SMART	ELECTRIC WATER HEATERS	WALL-MOUNTED VERTICAL

- Electric water heater combining the best available technologies
- Contains self-learning Smart Control Unit for optimisation of consumption, saving up to 15% on expense
- Can be controlled using DZD smartphone app (Android/iOS)
- Smart HDO function (low tariff): the heater recognizes the low tariff in electrical network.
- Independent diagnostics of malfunctions, e.g. status of protective anodes
- Can be used as a classic heater
- Can be plugged into any socket without temporal or other control

Type of storage tank		OKHE 80 SMART	OKHE 100 SMART	OKHE 125 SMART	OKHE 160 SMART
Order number		140111601	140811601	140311601	140611601
Capacity	[l]	77	100	125	149
Max. weight of the empty water heater	[kg]	35	39	46	52
Insulation thickness	[mm]	to 80			
Thermal conductivity of the insulation	[W•m^{-1}•K^{-1}]	0,022			
Power consumption of the el. heating unit	[W]	2200			
Heating time from 10 °C to 60 °C	[h]	2	2,6	3,3	3,9
Electrical connection		1/N/PE ~ 230V/50Hz			
Recommended circuit breaker size	[A]	16			
Degree of protection		IP44			
Max. operating temp. / overpressure in tank	[°C]/[bar]	80/6			
Energy efficiency class		B			C
Annual consumption	[kWh•a^{-1}]	1203	1217	1255	2487
Mixed water V40	[l]	138,70	165,41	231,10	242,83

Dimensions [mm]	A	B	C	D	E	F	H	K	R
OKHE 80 SMART	740	550	19	520	582	464	148	117	450
OKHE 100 SMART	885	550	19	520	727	605	148	117	450
OKHE 125 SMART	1050	550	19	520	757	638	283	117	450
OKHE 160 SMART	1235	550	19	520	1000	880	225	117	450

SOCKET NO. 1 3/4" outer

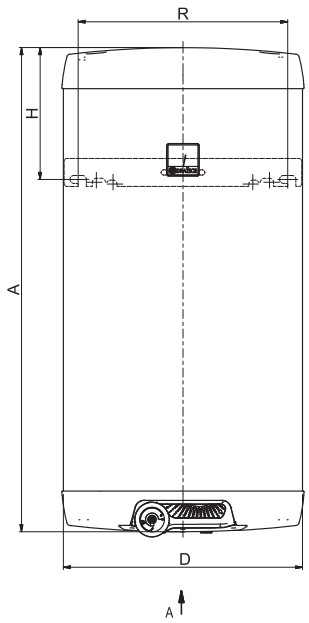

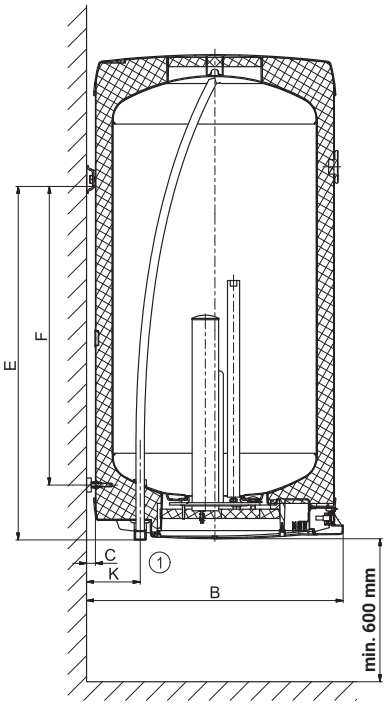

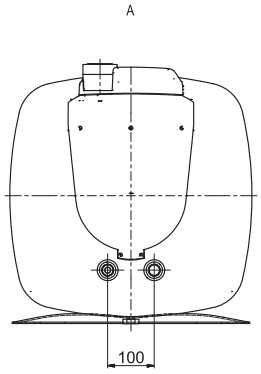

OKHE	ELECTRIC WATER HEATERS	WALL-MOUNTED VERTICAL

- Produced as wall-mounted and square-shaped – more interesting design
- With a 2.2 kW electrical heating unit
- Ceramic heating element 4 kW on demand
- Above-average thickness of insulation in corners

Type of storage tank		OKHE 80	OKHE 100	OKHE 125	OKHE 160
Order number model 2,2 kW		140110801	140810801	140310801	140610801
Order number model 4 kW		140110803	140810803	140310803	140610803
Capacity	[l]	75	100	121	153
Max. weight of the empty water heater	[kg]	34	38	45	51
Insulation thickness	[mm]	to 80			
Thermal conductivity of the insulation	[W•m^{-1}•K^{-1}]	0,022			
Power consumption of the el. heating unit	[W]	2200			
Heating time from 10 °C to 60 °C	[h]	2	2,6	3,2	4
Electrical connection		1/N/PE ~ 230V/50Hz			
Recommended circuit breaker size	[A]	16			
Degree of protection		IP44			
Max. operating temp. / overpressure in tank	[°C]/[bar]	80/6			
Energy efficiency class		C			
Annual consumption	[kWh•a^{-1}]	1391	1395	1353	2715
Mixed water V40	[l]	124,83	151,66	180,40	219,82

Dimensions [mm]	A	B	C	D	E	F	H	K	R
OKHE 80	740	550	19	520	582	464	148	117	450
OKHE 100	885	550	19	520	727	605	148	117	450
OKHE 125	1050	550	19	520	757	638	283	117	450
OKHE 160	1235	550	19	520	1000	880	225	117	450

SOCKET no. 1 3/4" outer

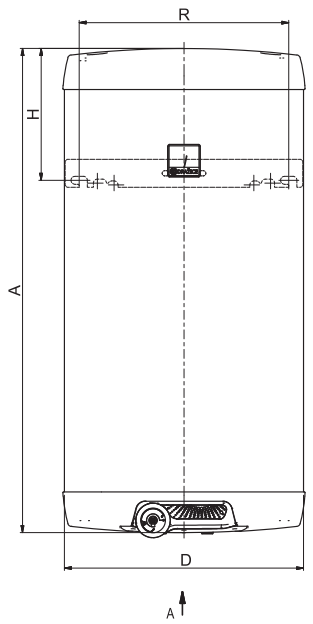

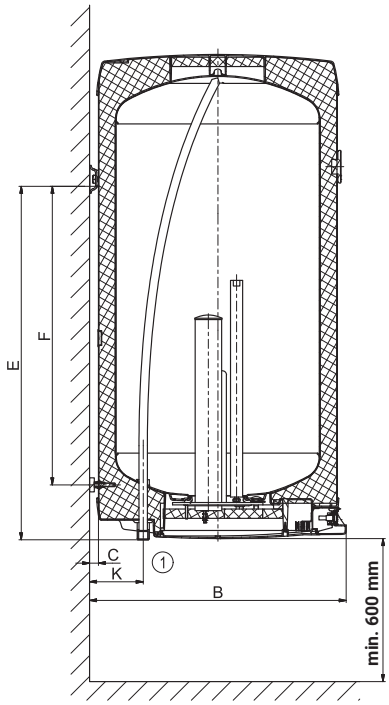

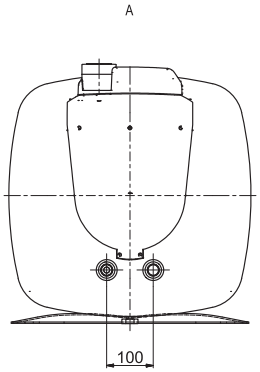

OKCE

ELECTRIC WATER HEATERS

WALL-MOUNTED VERTICAL

- Comes in wall-mounted version
- With a 2.2 kW electrical heating unit
- Ceramic heating element 4 kW or extra connection for circulation on demand **(not available for OKCE 50)**
- 1 wall-mounted console for models 50–160; 2 wall-mounted consoles for model 200

OKCE 50–160

OKCE 200

Type of storage tank		OKCE 50	OKCE 80	OKCE 100	OKCE 125	OKCE 160	OKCE 200
Order number model 2,2 kW		1105108101	1101108101	1108108101	1103108101	1106108101	1107108101
Order number model 4 kW			1101108103	1108108103	1103108103	1106108103	1107108103
Order number model 2,2 kW with circulation			1101108104	1108108104	1103108104	1106108104	1107108104
Order number model 4 kW with circulation					1103108110	1106108110	1107108110
Capacity	[l]	49	75	97	122	149	199
Max. weight of the empty water heater	[kg]	28	32	39	43	49	66
Insulation thickness	[mm]	42					
Thermal conductivity of the insulation	[W•m^{-1}•K^{-1}]	0,022					
Power consumption of the el. heating unit	[W]	2200					
Heating time from 10 °C to 60 °C	[h]	1,3	2	2,6	3,2	3,9	5,3
Electrical connection		1/N/PE ~ 230V/50Hz					
Recommended circuit breaker size	[A]	16					
Degree of protection		IP44					
Max. operating temp. / overpressure in tank	[°C]/[bar]	80/6					
Energy efficiency class		C					
Annual consumption	[kWh•a^{-1}]	1365	1342	1362	1409	2622	4403
Mixed water V40	[l]	80,84	138,70	165,41	231,10	242,83	331,26

Dimensions [mm]	A	B	C	D	E	F	H	K	R
OKCE 50	585	555	14	524	440	369	135	116	450
OKCE 80	757	555	14	524	605	508	142	116	450
OKCE 100	902	555	14	524	725	654	167	116	450
OKCE 125	1067	555	14	524	760	682	297	116	450
OKCE 160	1255	555	14	524	1000	925	245	116	450
OKCE 200	1300	617	14	584	806	600	480	116	450

SOCKET no. 1 3/4" outer

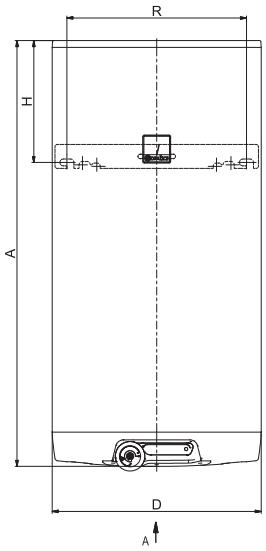

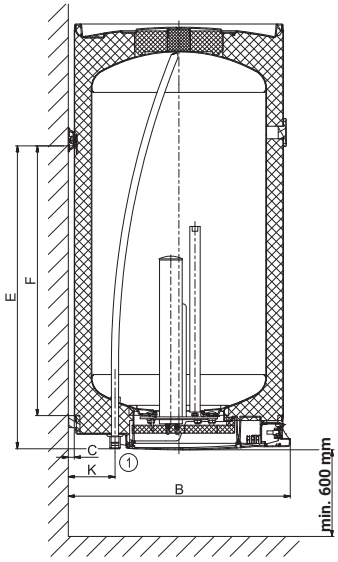

OKCE 50–160

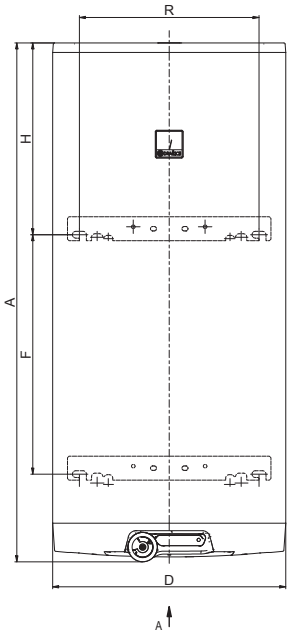

OKCE 200

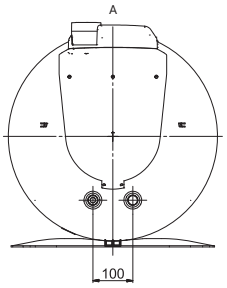

OKCE 50–160

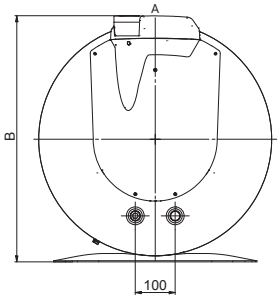

OKCE 200

OKCE 2/6 kW

ELECTRIC WATER HEATERS

WALL-MOUNTED VERTICAL

- Comes in wall-mounted version
- With 2/6 kW heating modes
- 2/6 kW models are equipped with a rapid water heater
- Rapid heating can be activated remotely by an external switch by the 2/6 models

OKCE 125–160 2/6 kW

OKCE 200 2/6 kW

Type of storage tank		OKCE 125 2/6 kW	OKCE 160 2/6 kW	OKCE 200 2/6 kW
Order number		1103108105	1106108105	1107108105
Capacity	[l]	122	149	199
Max. weight of the empty water heater	[kg]	45	52	70
Insulation thickness	[mm]	42		
Thermal conductivity of the insulation	[W•m⁻¹•K⁻¹]	0,022		
Power consumption of the el. heating unit	[W]	2000/6000		
Heating time from 10 °C to 60 °C	[h]	3,2/1,1	3,9/1,4	5,3/1,8
Electrical connection		3/N/PE ~ 400V/50Hz		
Recommended circuit breaker size	[A]	3 x 16		
Degree of protection		IP44		
Max. operating temp. / overpressure in tank	[°C]/[bar]	80/6		
Energy efficiency class		C		
Annual consumption	[kWh•a⁻¹]	1409	2622	4403
Mixed water V40 (for 2 kW)	[l]	231,10	242,83	331,26

Dimensions [mm]	A	B	C	D	E	F	H	K	R
OKCE 125 2/6 kW	1067	555	14	524	760	682	297	116	450
OKCE 160 2/6 kW	1255	555	14	524	1000	925	245	116	450
OKCE 200 2/6 kW	1300	617	14	584	806	600	480	116	450

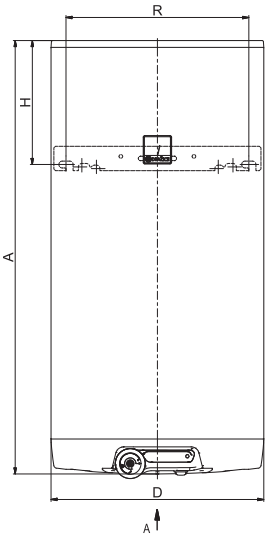

OKCE 125–160 2/6 kW

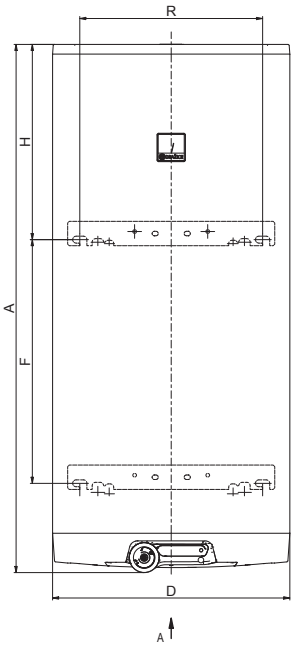

OKCE 200 2/6 kW

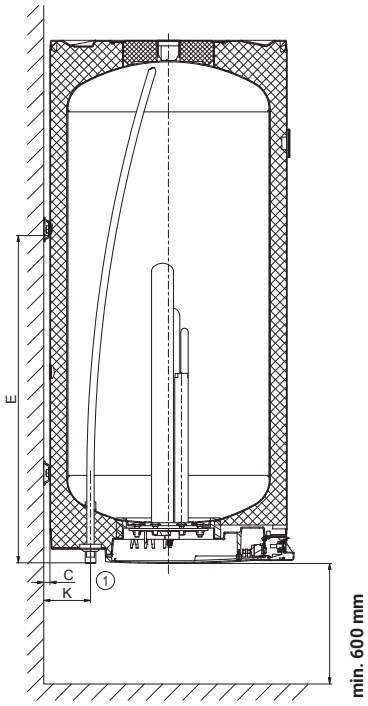

SOCKET no. 1 3/4" outer

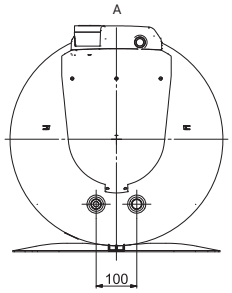

OKCE 125–160 2/6 kW

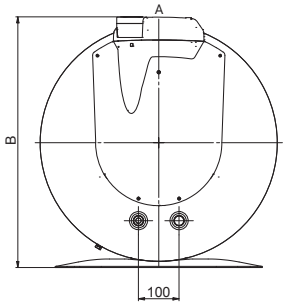

OKCE 200 2/6 kW

OKCE 2/4 kW, 2/2 kW

ELECTRIC WATER HEATERS | **WALL-MOUNTED VERTICAL**

- Comes in wall-mounted version
- They have 2 independent heating circuits
- With 2/4 kW or 2/2 kW heating modes
- Can use surplus electricity from solar panels
- Can be used for tariff heating from 2 energy suppliers

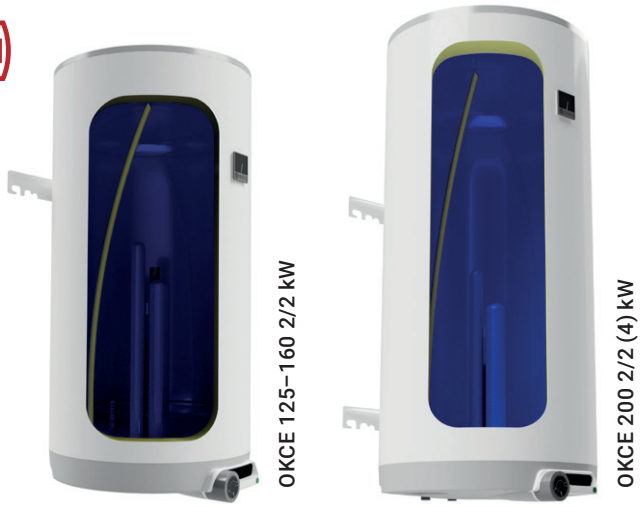

Type of storage tank		NEW OKCE 125 2/2 kW	NEW OKCE 160 2/2 kW	NEW OKCE 200 2/2 kW	OKCE 200 2/4 kW
Order number		1103108115	1106108115	1107108115	1107108102
Capacity	[l]	122	149	199	200
Max. weight of the empty water heater	[kg]	45	52	70	70
Insulation thickness	[mm]	42			
Thermal conductivity of the insulation	[W•m⁻¹•K⁻¹]	0,022			
Power consumption of the el. heating unit	[W]	2000/2200			2000/4000
Heating time from 10 °C to 60 °C	[h]	3,5/1,7	4,3/2,0	5,8/2,7	5,3/2,9
Electrical connection		2x 1/N/PE ~ 230V/50Hz			1/N/PE ~ 230V/50Hz 3/N/PE ~ 400V/50Hz
Recommended circuit breaker size	[A]	16, 16			1 × 16; 3 × 16
Degree of protection		IP44			
Max. operating temp. / overpressure in tank	[°C]/[bar]	80/6			
Energy efficiency class		C			
Annual consumption	[kWh•a⁻¹]	1409	2622	4403	4403
Mixed water V40 (for 2 kW)	[l]	231,10	242,83	331,26	331,26

Dimensions [mm]	A	B	C	D	E	F	H	K	R
OKCE 125 2/2 kW	1067	555	14	524	760	682	297	116	450
OKCE 160 2/2 kW	1255	555	14	524	1000	925	245	116	450
OKCE 200 2/2 kW	1300	617	14	584	806	600	480	116	450
OKCE 200 2/4 kW	1300	617	14	584	806	600	480	116	450

SOCKET no. 1 3/4" outer

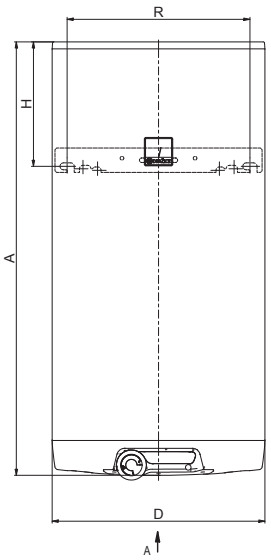

OKCE 125–160 2/2 kW

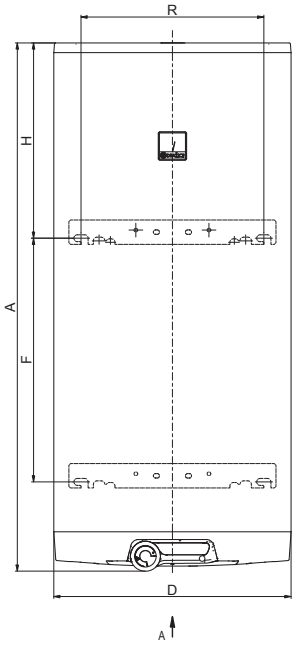

OKCE 200 2/2 (4) kW

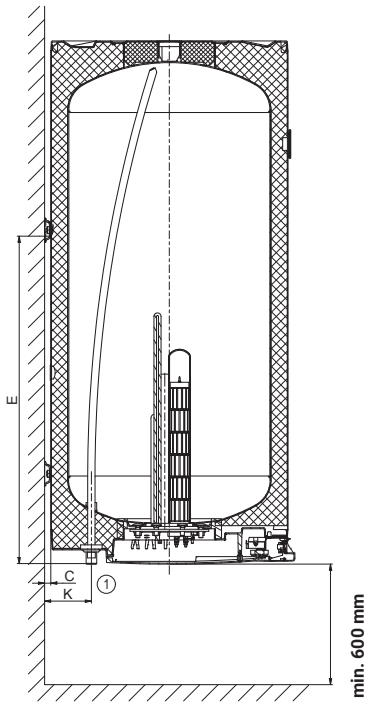

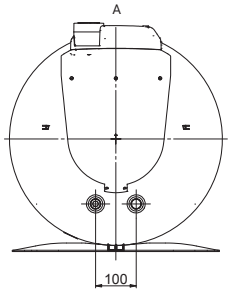

OKCE 125–160 2/2 kW

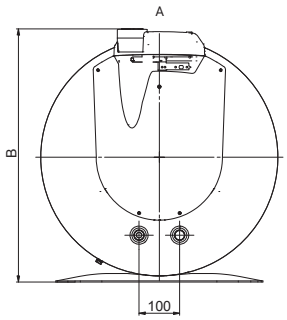

OKCE 200 2/2 (4) kW

OKCEV	ELECTRIC WATER HEATERS	WALL-MOUNTED HORIZONTAL

- Produced solely in right-hand design
- With a 2.2 kW electrical heating unit
- Ceramic heating element 4 kW or extra connection for circulation on demand
- Includes flexible wall hinge

OKCEV 100–160

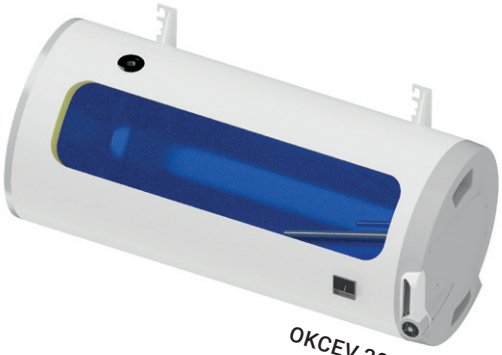

OKCEV 200

Type of storage tank		OKCEV 100	OKCEV 125	OKCEV 160	OKCEV 200
Order number model 2,2 kW		1108308211	1103308211	1106308211	1107308211
Order number model 4 kW					1107308203
Order number model 2,2 kW with circulation					1107308204
Order number model 4 kW with circulation					1107308210
Capacity	[l]	98	123	148	201
Max. weight of the empty water heater	[kg]	42	48	54	71
Insulation thickness	[mm]	42			
Thermal conductivity of the insulation	[W•m^{-1}•K^{-1}]	0,022			
Power consumption of the el. heating unit	[W]	2200			
Heating time from 10 °C to 60 °C	[h]	2,6	3,3	3,9	5,3
Electrical connection		1/N/PE ~ 230V/50Hz			
Recommended circuit breaker size	[A]	16			
Degree of protection		IP42			
Max. operating temp. / overpressure in tank	[°C]/[bar]	80/6			
Energy efficiency class		C			
Annual consumption	[kWh•a^{-1}]	1402	2614	2691	4324
Mixed water V40	[l]	164,98	195,75	244,59	301,93

Dimensions [mm]	A	B	C	D	E	F	L	R
OKCEV 100	902	435	707	524	204	226	563	450
OKCEV 125	1067	600	872	524	204	226	563	450
OKCEV 160	1255	785	1057	524	254	226	563	450
OKCEV 200	1290	785	1077	584	258	246	617	450

SOCKET no. 1 3/4" inner

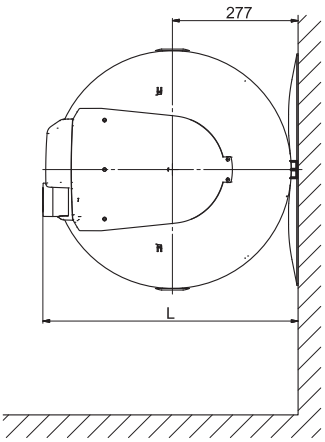

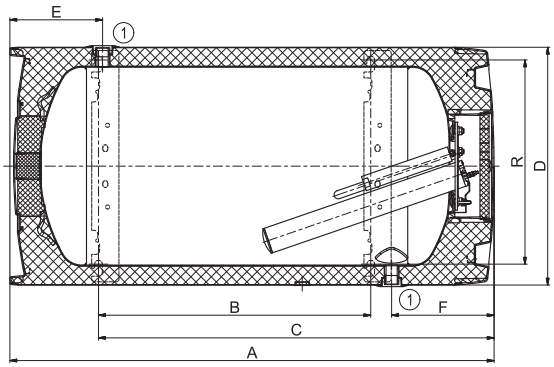

OKCEV 100–160

OKCEV 200

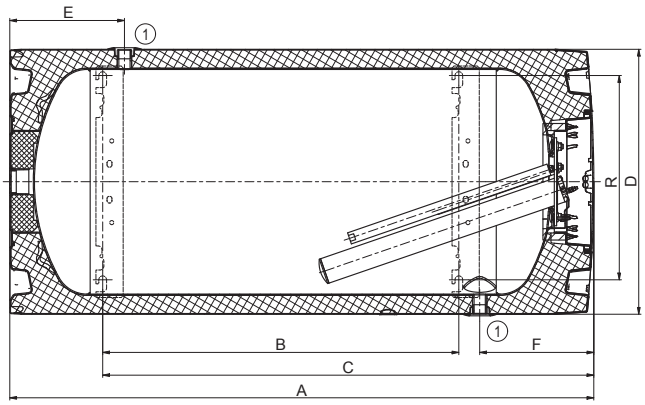

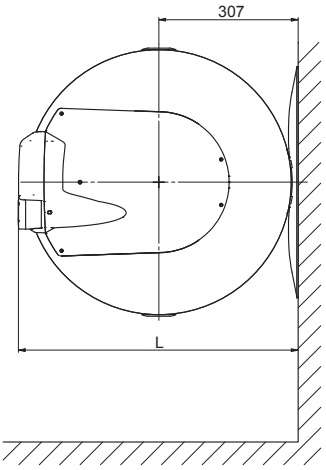

NEW

- With electrical heating units rated at 3,5 kW, 5 kW, 6,5 kW and 8 kW
- Use of a low-pressure water faucet is required
- Only for one consumption point

Type of storage tank		PTO 3,5	PTO 5	PTO 6,5	PTO 8
Order number		105213210	105213211	105213212	105213213
Weight	[kg]	1,6			
Power consumption of the el. heating unit	[W]	3500	5000	6500	8000
Heating	[h]	by means of through-flow			
Electrical connection		1/N/PE ~ 230 V/50 Hz		3/N/PE ~ 400 V/50 Hz	
Recommended circuit breaker size	[A]	20	25	3 x 16	
Degree of protection		IP25			
Energy efficiency class		A			
Annual consumption	[kWh•a^{-1}]	478	475	465	464

Dimensions [mm]	A	B	D
PTO 3,5	161	80	204
PTO 5	161	80	204
PTO 6,5	175	80	204
PTO 8	175	80	204

SOCKET no. 1 3/8" outer

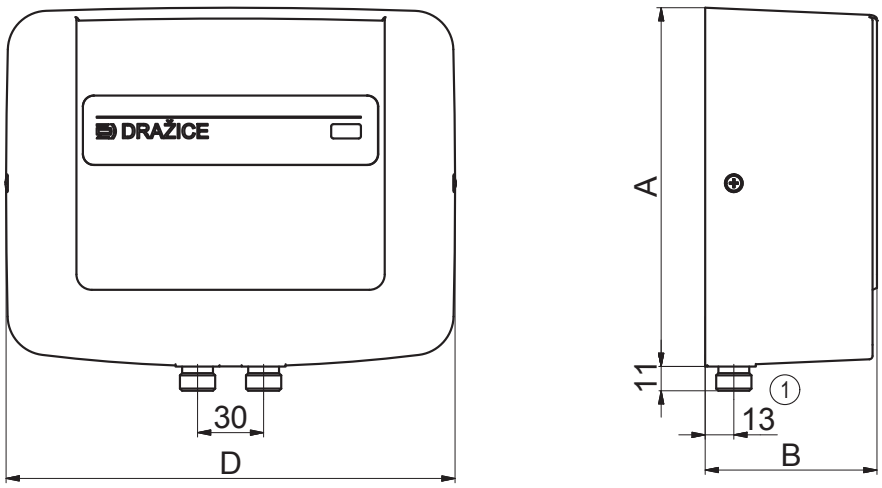

HA-DR	ELECTRIC WATER HEATERS	SMALL-PRESSURE FLOW HEATERS

- With electrical heating units rated at 3,5 kW, 4,5 kW and 5,5 kW
- Use of a low-pressure water faucet is required
- Mechanical protection to prevent the heating element from overheating
- Only for one consumption point

Type of storage tank		HA-DR 135 (3,5 kW)	HA-DR 145 (4,5 kW)	HA-DR 155 (5,5 kW)
Order number		105213300	105213301	105213302
Weight	[kg]	0,7		
Power consumption of the el. heating unit	[W]	3500	4500	5500
Heating	[h]	by means of through-flow		
Electrical connection		1/N/PE ~ 230 V/50 Hz		
Recommended circuit breaker size	[A]	16	20	25
Degree of protection		IP24		
Energy efficiency class		A		
Annual consumption	[kWh•a^{-1}]	460	472	466

Dimensions [mm]	A	B	C	D	E
HA-DR 135 (3,5 kW)	191	153	30	87	59
HA-DR 145 (4,5 kW)	191	153	30	87	59
HA-DR 155 (5,5 kW)	191	153	30	87	59

SOCKET no. 1 3/8" outer

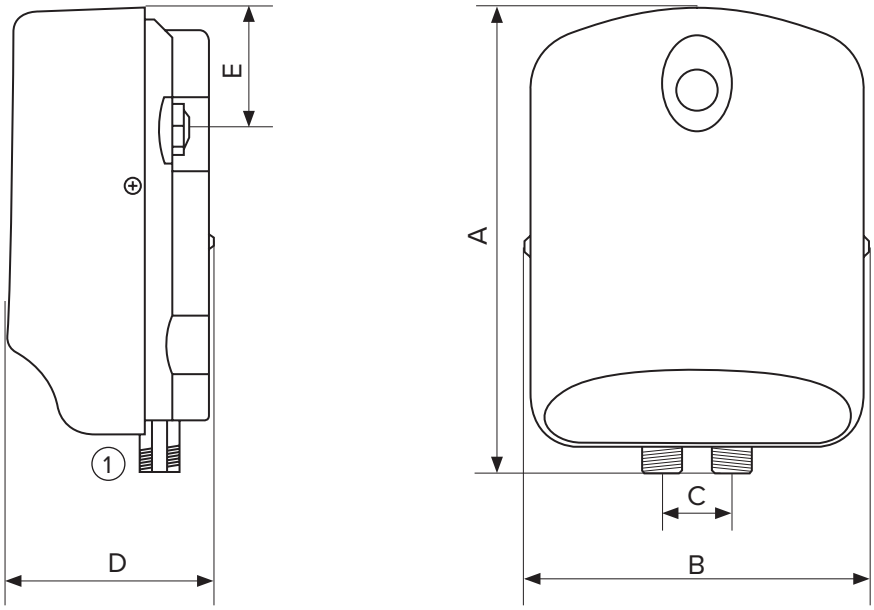

- Simple manual switching of water heating performancey
- High comfort of water heating and significant electricity saving
- Possible connection to more consumption locations
- Assembly in the shower corner is not possible
- Power design: 4,5/7 kW; 5,5/9 kW; 5,5/11 kW

Type of storage tank		MX2207 - 4,5/7 kW	MX2209 - 5,5/9 kW	MX2211 - 5,5/11 kW
Order number		105213310	105213311	105213312
Weight	[kg]	1,7		
Power consumption of the el. heating unit	[W]	4500 + 2500	5500 + 3500	2 x 5500
Heating	[h]	by means of through-flow		
Electrical connection		2/N/PE ~ 2 x 230 V / 50 Hz		
Recommended circuit breaker size	[A]	3 x 20	3 x 25	3 x 25
Degree of protection		IP24		
Energy efficiency class		A		
Annual consumption	[kWh•a^{-1}]	446	460	453

Dimensions [mm]	A	B	C	D	E	F	G	H	I	J
MX2207 - 4,5/7 kW	246	218	30	75	208	40	140	78+25	74	20
MX2209 - 5,5/9 kW	246	218	30	75	208	40	140	78+25	74	20
MX2211 - 5,5/11 kW	246	218	30	75	208	40	140	78+25	74	20

SOCKET no. 1 3/8" outer

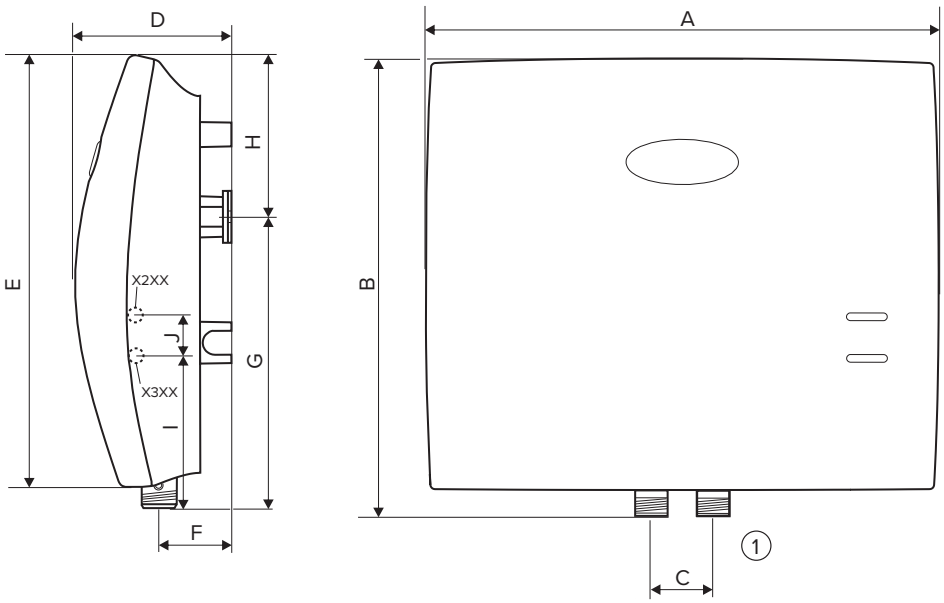

HA-DR T	ELECTRIC WATER HEATERS	PRESSURE FLOW HEATERS

- With electrical heating units rated at 3.5 kW, 4.5 kW and 5 kW
- For common water tap
- Electrical protection to prevent the heating element from overheating
- For just one supply point

Type of storage tank		HA-DR T 135 (3,5 kW)	HA-DR T 145 (4,5 kW)	HA-DR T 155 (5,5 kW)
Order number		105213305	105213306	105213307
Weight	[kg]	0,8		
Power consumption of the el. heating unit	[W]	3500	4500	5500
Heating	[h]	by means of through-flow		
Electrical connection		1/N/PE ~ 230 V/50 Hz		
Recommended circuit breaker size	[A]	16	20	25
Degree of protection		IP24		
Energy efficiency class		A		
Annual consumption	[kWh•a^{-1}]	460	472	466

Dimensions [mm]	A	B	C	D	E
HA-DR T 135 (3,5 kW)	191	153	30	87	59
HA-DR T 145 (4,5 kW)	191	153	30	87	59
HA-DR T 155 (5,5 kW)	191	153	30	87	59

SOCKET no. 1 3/8" outer

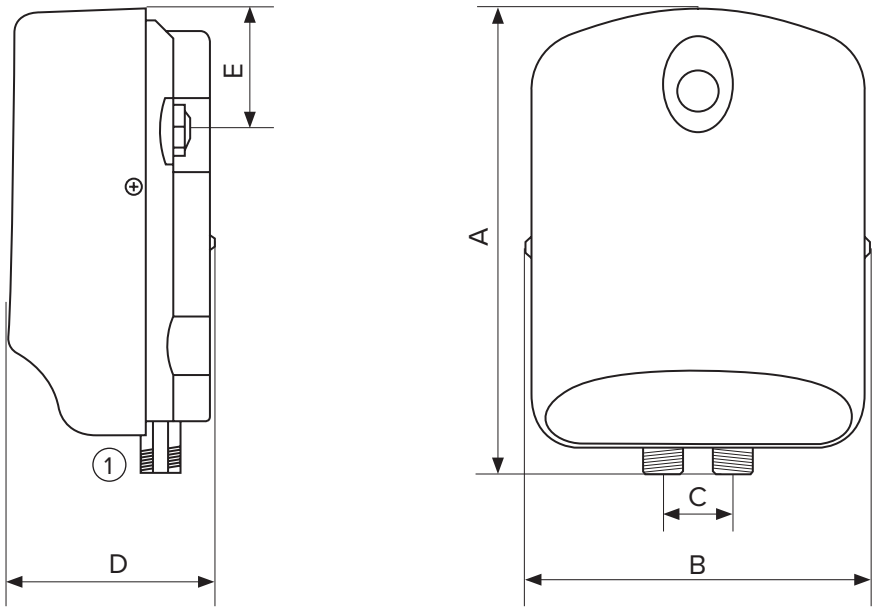

TO / TO/E 5.1, 10.1	ELECTRIC WATER HEATERS	SMALL CAPACITY PRESSURE AND NON PRESSURE WATER HEATERS

- Enamelled pressure vessel
- Electrical heating unit with power consumption of 1,5 kW
- Can be placed under (IN) or above (UP) the draw-off point
- For one or more consumption points
- 2 versions: with thermostat with fixed TO length or with TO / E touch control panel

NEW

NEW

TO 5.1 IN

TO/E 5.1 UP

TO 10.1 IN

TO/E 10.1 UP

Type of storage tank		TO 5.1 UP	TO/E 5.1 UP	TO 5.1 IN	TO/E 5.1 IN	TO 10.1 UP	TO/E 10.1 UP	TO 10.1 IN	TO/E 10.1 IN
Order number		182310801	182310803	182310802	182310804	182410801	182410803	182410802	182410804
Capacity	[l]	4,6				9,6			
Weight	[kg]	6				8			
Insulation thickness	[mm]	20							
Thermal conductivity of the insulation	[W•m⁻¹•K⁻¹]	0,022							
Power consumption of the el. heating unit	[W]	1500							
Heating time from 10 °C to 60 °C	[min]	13				25			
Electrical connection		1/N/PE ~ 230 V/50 Hz							
Recommended circuit breaker size	[A]	16							
Degree of protection		IPX5							
Max. operating temp. / overpressure in tank	[°C]/[bar]	80/6							
Energy efficiency class		A							
Annual consumption	[kWh•a⁻¹]	497	497	509	509	525	525	525	525

Dimensions [mm]	A	B	C	D	E
TO 5.1 UP / TO/E 5.1 UP	330	265	–	290	275
TO 5.1 IN / TO/E 5.1 IN	338	–	93	290	275
TO 10.1 UP / TO/E 10.1 UP	465	400	–	290	275
TO 10.1 IN / TO/E 10.1 IN	473	–	93	290	275

SOCKET no. 1 1/2" outer

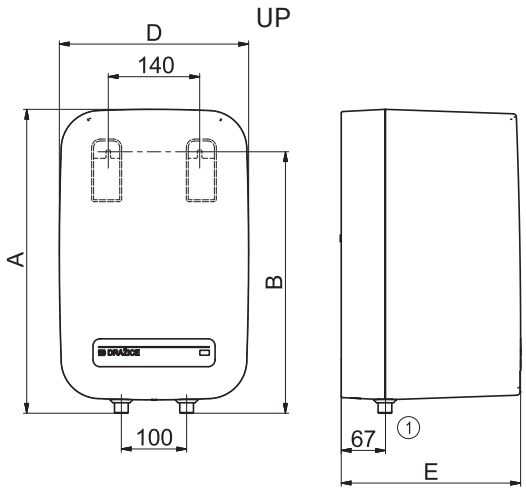

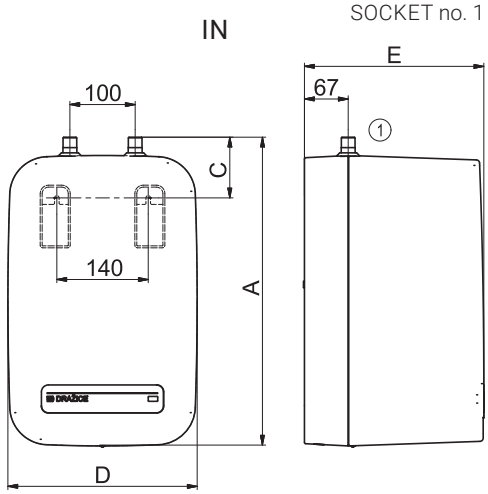

TO 15	ELECTRIC WATER HEATERS	SMALL-CAPACITY PRESSURE TYPE

- Enamelled pressure vessel
- Electrical heating unit with power consumption of 2 kW
- Can be placed under (IN) or above (UP) the consumption point
- For one or more consumption points

Type of storage tank		TO 15 UP	TO 15 IN
Order number		105313208	105313209
Capacity	[l]	14,8	14,9
Weight	[kg]	11	
Insulation thickness	[mm]	30	
Thermal conductivity of the insulation	[W•m^{-1}•K^{-1}]	0,025	
Power consumption of the el. heating unit	[W]	2000	
Heating time from 10 °C to 60 °C	[min]	29	
Electrical connection		1/N/PE ~ 230 V/50 Hz	
Recommended circuit breaker size	[A]	16	
Degree of protection		IP24	
Max. operating temp. / overpressure in tank	[°C]/[bar]	80/6	
Energy efficiency class		A	
Annual consumption	[kWh•a^{-1}]	510	523

Dimensions [mm]	A	B	C	D	E
TO 15 UP	495	410	–	350	310
TO 15 IN	495	–	130	350	310

SOCKET NO. 1 1/2" outer

UP

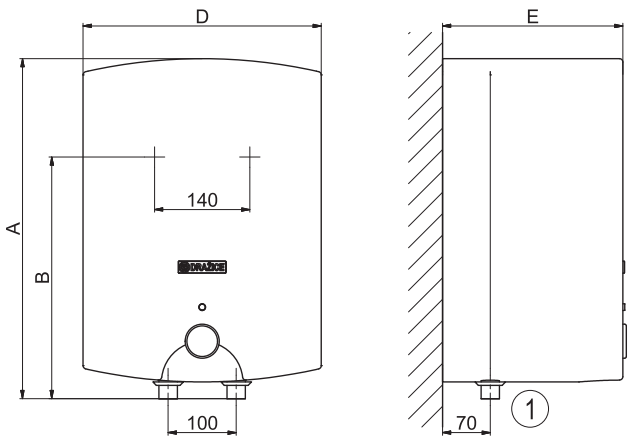

IN

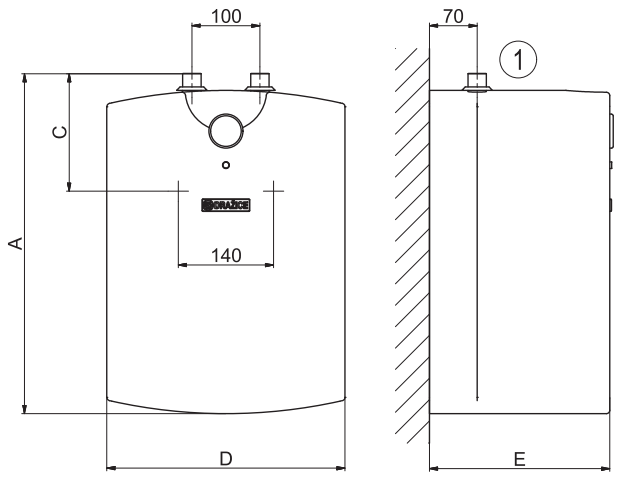

TO 20.1	ELECTRIC WATER HEATERS	SMALL-CAPACITY PRESSURE TYPE

- Enamelled pressure vessel
- Electrical heating unit with power consumption of 2.2 kW
- The storage tank is of sufficient capacity for a shower or multiple washbasins

Type of storage tank		TO 20.1
Order number		1202105101
Capacity	[l]	20
Max. weight of the empty water heater	[kg]	12
Insulation thickness	[mm]	20
Thermal conductivity of the insulation	[W•m^{-1}•K^{-1}]	0,022
Power consumption of the el. heating unit	[W]	2200
Heating time from 10 °C to 60 °C	[min]	30
Electrical connection		1/N/PE ~ 230 V/50 Hz
Recommended circuit breaker size	[A]	16
Degree of protection		IP44
Max. operating temp. / overpressure in tank	[°C]/[bar]	80/6
Energy efficiency class		A
Annual consumption	[kWh•a^{-1}]	485
Mixed water V40	[l]	26,14

Dimensions [mm]	A	B	D	E	H	K	R
TO 20.1	585	254	516	357	247	103	180

SOCKET NO. 1 1/2" outer

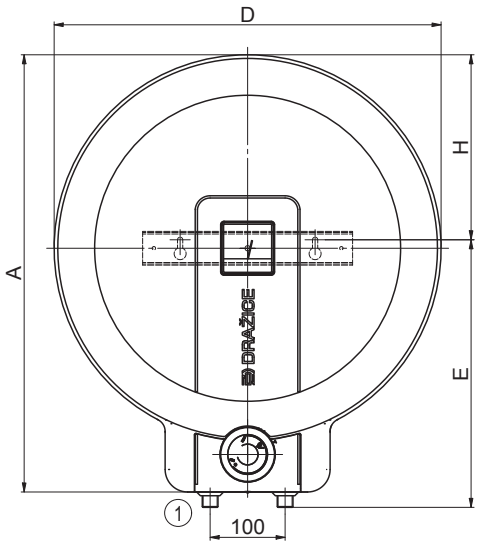

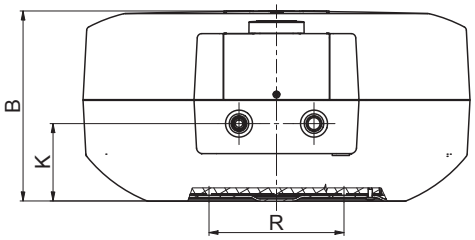

CLOSE	ELECTRIC WATER HEATERS	SMALL-CAPACITY PRESSURE TYPE

- Copper pressure vessel
- Electrical heating unit with power consumption of 2.2 kW
- Can be placed under (IN) or above (UP) the consumption point

Type of storage tank		CLOSE 10 UP	CLOSE 10 IN	CLOSE 15 UP	CLOSE 15 IN
Order number		105413201	105413200	105413202	105413203
Capacity	[l]	10,8		15	
Weight	[kg]	6,5		7,5	
Power consumption of the el. heating unit	[W]	2200			
Heating time from 10 °C to 60 °C	[min]	20		25	
Electrical connection		1/N/PE ~ 230 V/50 Hz			
Recommended circuit breaker size	[A]	16			
Degree of protection		IP44			
Max. operating temp. / overpressure in tank	[°C]/[bar]	80/8			
Energy efficiency class		A			
Annual consumption	[kWh•a^{-1}]	512	515	539	529
Mixed water V40	[l]	39	26	39	26

Dimensions [mm]	A	B	D
CLOSE 10	452	285	300
CLOSE 15	452	285	300

SOCKET NO. 1 3/8" outer

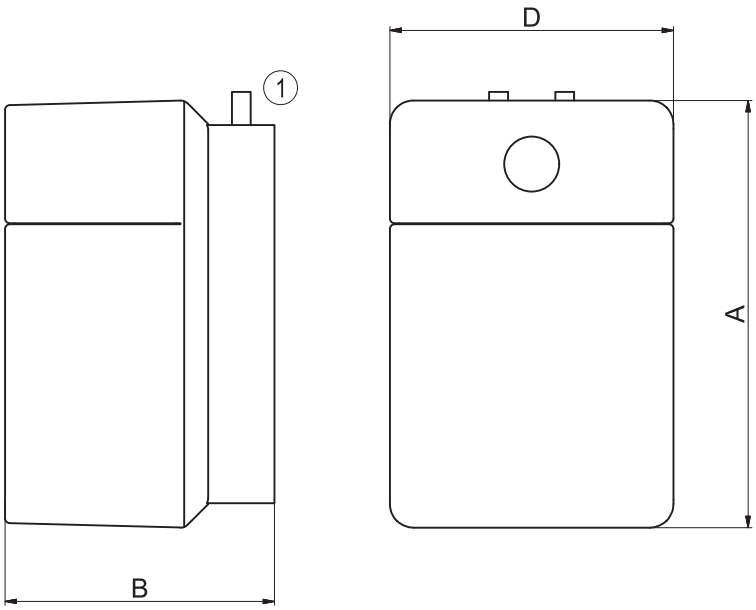

ELECTRIC WATER HEATERS AND STORAGE TANKS

FLOOR-STANDING

FLOOR-STANDING
FOR INSTALATION ELECTRIC HEATING ELEMENT

OKCE S/2,2 kW

ELECTRIC WATER HEATERS AND STORAGE TANKS

FLOOR-STANDING

- All storage tanks have inlet/outlet for circulation connection
- Discharge outlet enclosed
- Equipped with electrical heating unit

Type of storage tank		OKCE 100 S/2,2 kW	OKCE 125 S/2,2 kW
Order number		1108111101	1103111101
Capacity	[l]	98	128
Max. weight of the empty water heater	[kg]	39	45
Insulation thickness	[mm]	42	
Thermal conductivity of the insulation	[W•m^{-1}•K^{-1}]	0,022	
Power consumption of the el. heating unit	[W]	2200	
Heating time from 10 °C to 60 °C	[h]	2,6	3,4
Electrical connection		1/N/PE ~ 230V/50Hz	
Recommended circuit breaker size	[A]	16	
Degree of protection		IP42	
Max. operating temp. / overpressure in tank	[°C]/[bar]	80/6	
Energy efficiency class		C	
Annual consumption	[kWh•a^{-1}]	1349	2637
Mixed water V40	[l]	133,17	156,44

Dimensions [mm]	A	D	E	G	H
OKCE 100 S/2,2 kW	902	524	892	535	145
OKCE 125 S/2,2 kW	1067	524	1057	635	145

SOCKET no. 1 3/4" outer
SOCKET no. 2 3/4" inner
SOCKET no. 3 1/2" inner

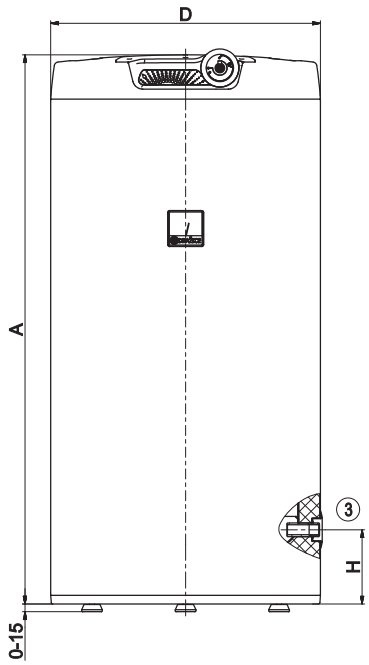

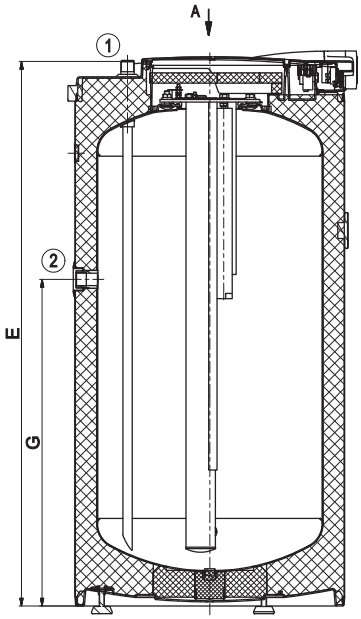

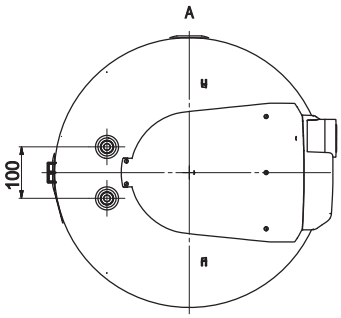

OKCE S	ELECTRIC WATER HEATERS AND STORAGE TANKS	FLOOR-STANDING FOR CONNECTING THE HEAT PUMP

- All storage tanks have inlet/outlet for circulation connection
- Installation of TPK 210-12 flanged heating unit required
- Storage tanks with capacities of 200-500 l have an inlet/outlet for TJ 6/4" heating unit
- RDU, REU heating units can be attached using a reduction flange
- Containers 750 and 1000 l can be fitted with SE-series heating units or with reduction flange with TPK and R heating unit
- Removable insulation for 750-1000 models

OKCE 160 S

OKCE 200 S, 250 S, 300 S

Type of storage tank		OKCE 160 S	OKCE 200 S	OKCE 250 S	OKCE 300 S
Order number		1106115101	1107115101	1109115101	121011501
Capacity	[l]	157	210	250	300
Max. weight of the empty water heater	[kg]	52	72	76	80
Insulation thickness	[mm]	42			60
Thermal conductivity of the insulation	[W•m^{-1}•K^{-1}]	0,022			0,021
Power consumption of the el. heating unit	[W]	according to the type of accessories			
Heating time from 10 °C to 60 °C	[h]	according to the type of accessories			
Electrical connection		according to the type of accessories			
Recommended circuit breaker size	[A]	according to the type of accessories			
Degree of protection		according to the type of accessories			
Max. operating temp. / overpressure in tank	[°C]/[bar]	80/6			80/10
Energy efficiency class		C			
Annual consumption	[kWh•a^{-1}]	2612	4301	4215	4361
Mixed water V40	[l]	235,47	362,16	418,23	419,08

Dimensions [mm]	A	B	C	D	E	F	G	I	J
OKCE 160 S	1045	660	710	584	75	962	515	–	285
OKCE 200 S	1355	660	710	584	75	1275	855	810	285
OKCE 250 S	1535	660	710	584	75	1455	1055	810	285

SOCKET no. 1 3/4" outer
SOCKET no. 2 3/4" inner
SOCKET no. 3 6/4" inner

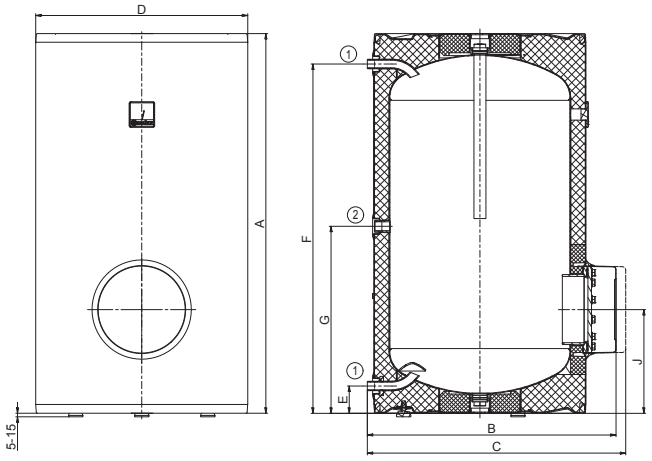

OKCE 160 S

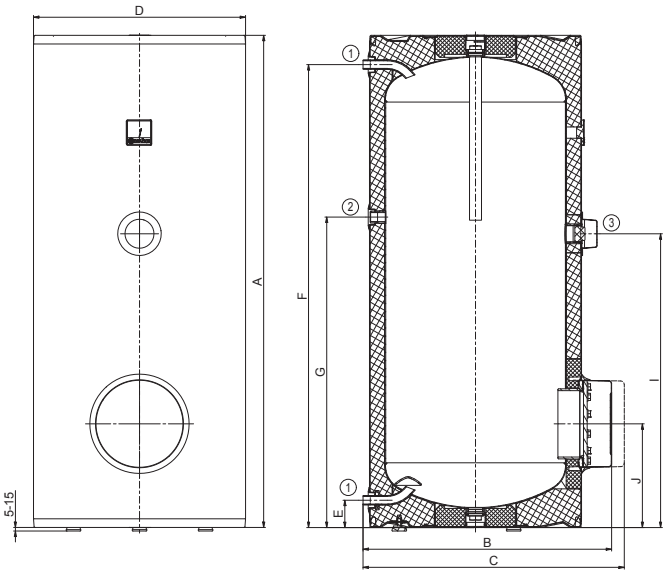

OKCE 200 S, 250 S

Dimensions [mm]	A	B	C	D	E	F	G	I	J
OKCE 300 S	1558	750	810	670	77	1579	760	895	325

SOCKET no. 1 1" outer
SOCKET no. 2 3/4" inner
SOCKET no. 3 6/4" inner

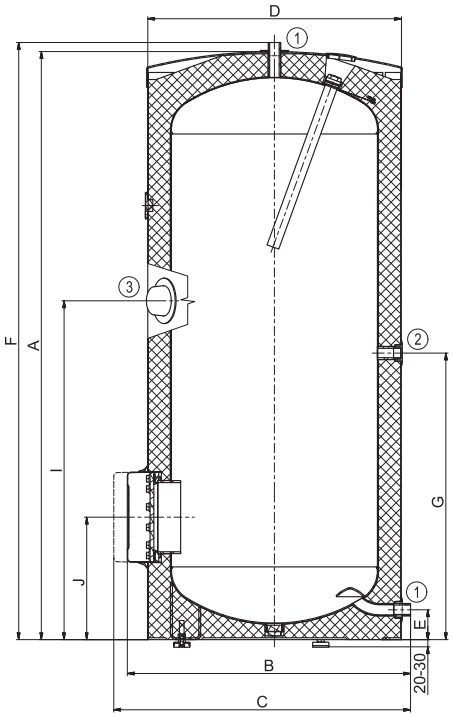

OKCE 300 S

Dimensions [mm]	A	B	C	D	E	F	G	I	J	P	R
OKCE 400 S	1920	750	810	650	79	1799	1194	1005	304	514	1289
OKCE 500 S	1924	800	860	700	55	1790	1264	1040	287	380	1409

SOCKET no. 1 1" outer
SOCKET no. 2 3/4" inner
SOCKET no. 3 1/2" inner
SOCKET no. 4 6/4" inner

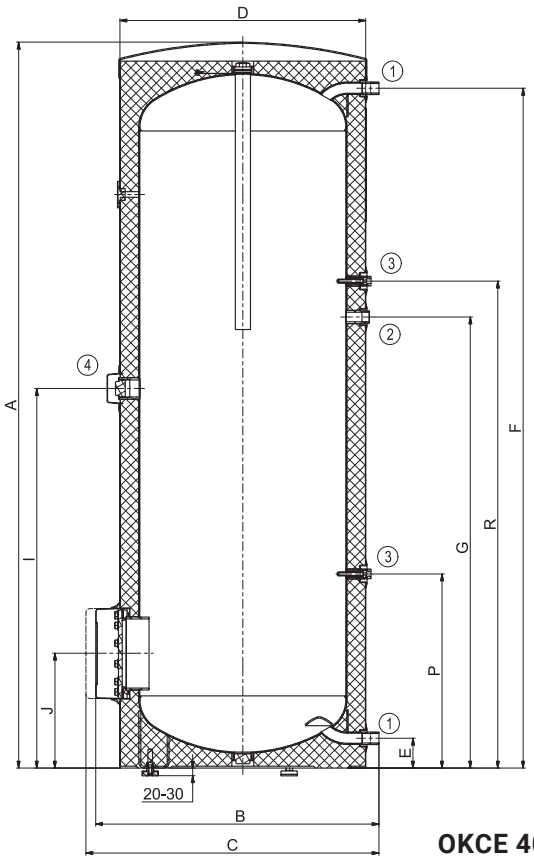

OKCE 400 S, 500 S

OKCE 750 S, 1000 S

Type of storage tank		OKCE 400 S	OKCE 500 S	OKCE 750 S	OKCE 1000 S
Order number		121411110	121311110	105513032	105513033
Capacity	[l]	389	462	750	969
Max. weight of the empty water heater	[kg]	97	106	158	206
Insulation thickness	[mm]	50	50	80	80
Thermal conductivity of the insulation	[W•m⁻¹•K⁻¹]	0,021		0,032	
Power consumption of the el. heating unit	[W]	according to the type of accessories			
Heating time from 10 °C to 60 °C	[h]	according to the type of accessories			
Electrical connection		according to the type of accessories			
Recommended circuit breaker size	[A]	according to the type of accessories			
Degree of protection		according to the type of accessories			
Max. operating temp. / overpressure in tank	[°C]/[bar]	80/10			
Energy efficiency class		C			
Static loss	[W]	99	110	127	140

Dimensions [mm]	A	B	C	d	D	D3	E	F	G	H	J	K	P	R
OKCE 750 S	2030	1030	max. 1140	750	910	225	100	1893	1147	1642	382	1477	292	947
OKCE 1000 S	2050	1130	max. 1240	850	1010	225	100	1910	1155	1650	390	1515	300	955

SOCKET no. 1 2" outer
SOCKET no. 2 5/4" inner
SOCKET no. 3 1/2" inner
SOCKET no. 4 5/4" outer

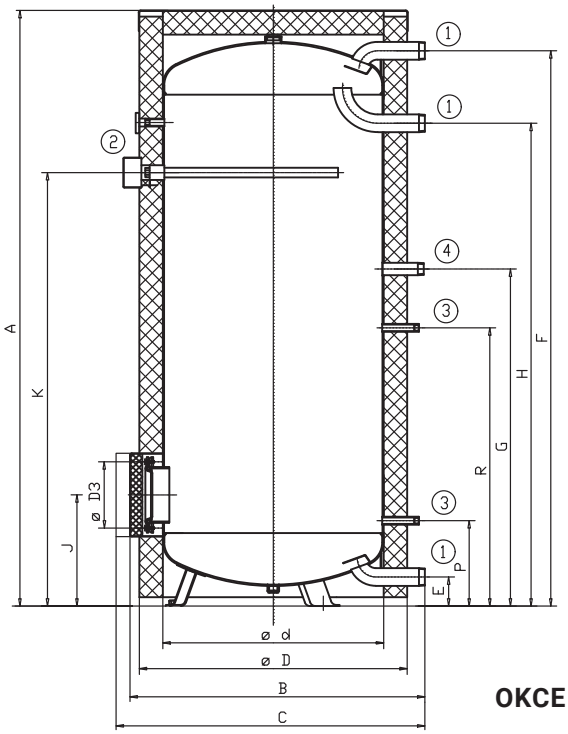

OKCE 750 S, 1000 S

DRAŽICE

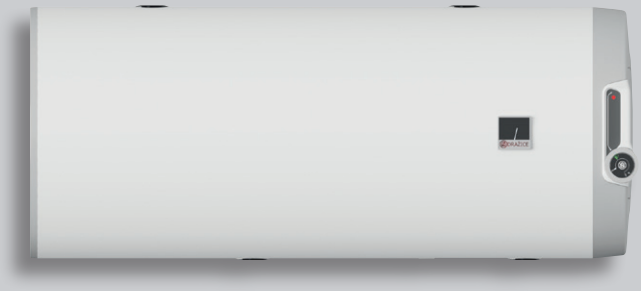

COMBINED WATER HEATERS

WALL-MOUNTED VERTICAL

WALL-MOUNTED HORIZONTAL

OKC	COMBINED WATER HEATERS	WALL-MOUNTED VERTICAL

- Comes in wall-mounted version
- With a 2.2 kW electrical heating unit
- Ceramic heating element 4 kW or extra connection for circulation on demand
- 1 wall-mounted console and support for models 80–125; 2 wall-mounted consoles for models 160–200

OKC 80–125

OKC 160

OKC 200

Type of storage tank		OKC 80	OKC 100	OKC 125	OKC 160	OKC 200
Order number model 2,2 kW		1101208101	1108208101	1103208101	1106208101	1107208101
Order number model 4 kW				1103208103	1106208103	1107208103
Order number model 2,2 kW with circulation					1106208104	1107208104
Order number model 4 kW with circulation					1106208110	1107208110
Capacity	[l]	73	93	117	145	194
Max. weight of the empty water heater	[kg]	40	50	55	62	79
Insulation thickness	[mm]	42				
Thermal conductivity of the insulation	[W•m^{-1}•K^{-1}]	0,022				
Power consumption of the el. heating unit	[W]	2200				
Heating time from 10 °C to 60 °C *	[h]	1,9	2,5	3,1	3,8	5,1
Electrical connection		1/N/PE ~ 230V/50Hz				
Recommended circuit breaker size	[A]	16				
Degree of protection		IP44				
Max. operating temp. / overpressure in tank	[°C]/[bar]	80/6				
Heat transfer surface of the exchanger *	[m^2]	0,41	0,68			
Capacity of the exchanger *	[l]	1,8	2,9			
Max. operating temperature / overpressure in exchanger	[°C]/[bar]	110/10				
Power of the exchanger at the 310 l at 80 °C *	[kW]	6	9			
Heating time by the exchanger from 10 °C to 60 °C *	[min]	50	48	55	67	86
Energy efficiency class		C				
Annual consumption	[kWh•a^{-1}]	1342	1362	1409	2622	4403
Mixed water V40	[l]	138,70	165,41	231,10	242,83	331,26

Dimensions [mm]	A	B	C	D	E	F	H	I	J	K	R
OKC 80	757	612	70	524	605	460	142	211	501	172	450
OKC 100	902	612	70	524	755	610	137	211	651	172	450
OKC 125	1067	612	70	524	755	610	302	211	651	172	450
OKC 160	1255	612	70	524	995	720	250	211	651	172	450
OKC 200	1300	672	70	584	804	600	490	252	692	172	450

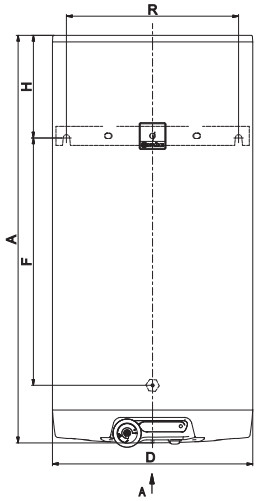

OKC 80–125

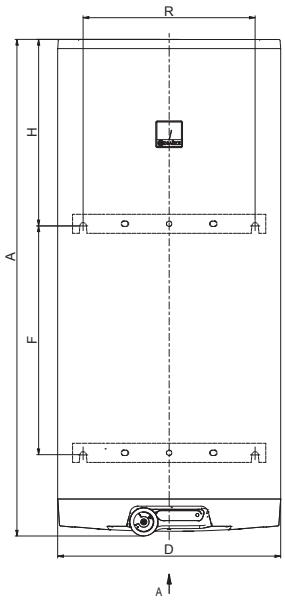

OKC 160–200

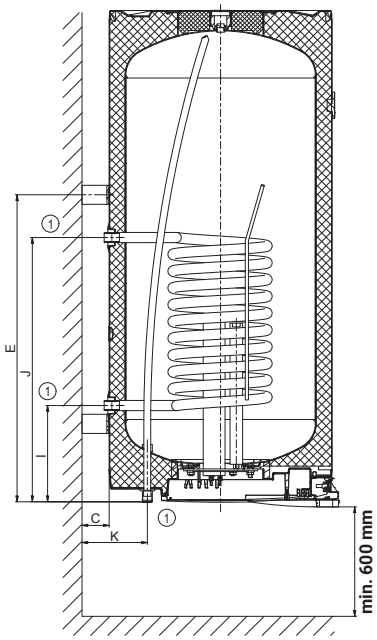

SOCKET no. 1 3/4" outer

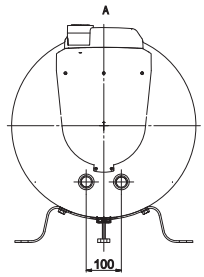

OKC 80–125

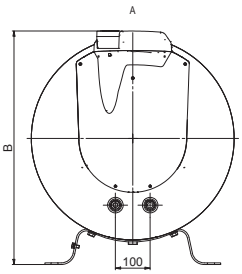

OKC 160–200

- With a 2.2 kW electrical heating unit
- Ceramic heating element 4 kW or extra connection for circulation on demand
- Suitable for solid fuel boilers
- Now with right-side and left-side versions
- Includes flexible wall hinge

Type of storage tank		OKCV 125	OKCV 160	OKCV 200
Order number model 2,2 kW		1103408211 (right) 1103408212 (left)	1106408211 (right) 1106408212 (left)	1107408211 (right) 1107408212 (left)
Order number model 4 kW				1107408203 (right) 1107408202 (left)
Order number model 2,2 kW with circulation				1107408204 (right) 1107408205 (left)
Order number model 4 kW with circulation				1107408210 (right) 1107408213 (left)
Capacity	[l]	123	148	201
Max. weight of the empty water heater	[kg]	63	69	85
Insulation thickness	[mm]	42		
Thermal conductivity of the insulation	[W•m^{-1}•K^{-1}]	0,022		
Power consumption of the el. heating unit	[W]	2200		
Heating time from 10 °C to 60 °C *	[h]	3,3	3,9	5,3
Electrical connection		1/N/PE ~ 230V/50Hz		
Recommended circuit breaker size	[A]	16		
Degree of protection		IP42		
Max. operating temp. / overpressure in tank	[°C]/[bar]	80/6		
Heat transfer surface of the exchanger *	[m^2]	0,7		0,75
Capacity of the exchanger *	[l]	11		12
Max. operating temperature / overpressure in exchanger	[°C]/[bar]	110/4		
Power of the exchanger at the 310 l at 80 °C *	[kW]	10		11
Heating time by the exchanger from 10 °C to 60 °C *	[min]	43	53	72
Energy efficiency class		C		
Annual consumption	[kWh•a^{-1}]	2614	2691	4324
Mixed water V40	[l]	195,75	244,59	301,93

Dimensions [mm]	A	B	C	D	E	F	I	J	L	R
OKCV 125	1067	600	872	524	204	226	513	439	563	450
OKCV 160	1255	785	1057	524	254	226	649	439	563	450
OKCV 200	1290	785	1077	584	258	246	670	439	617	450

SOCKET no. 1 3/4" inner

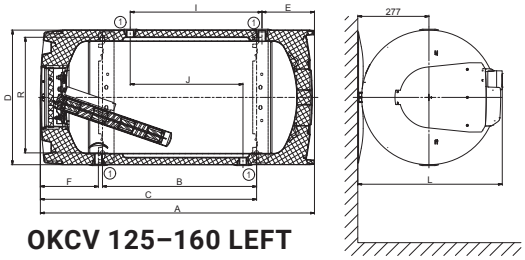

OKCV 125–160 LEFT

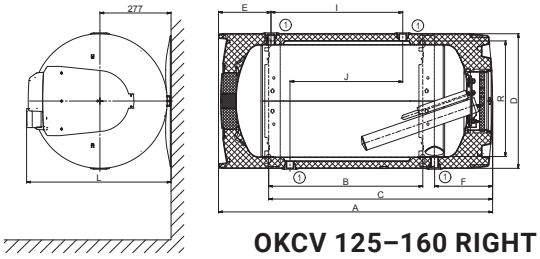

OKCV 125–160 RIGHT

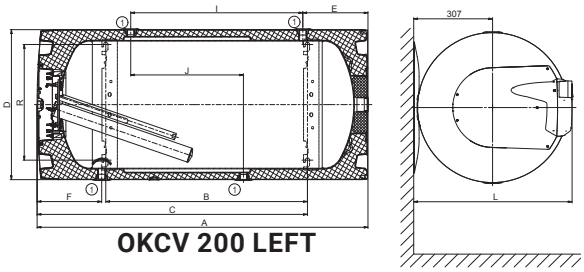

OKCV 200 LEFT

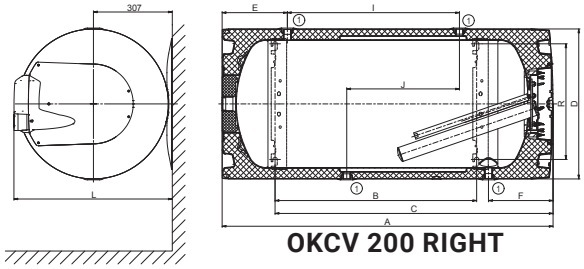

OKCV 200 RIGHT

DRAŽICE

HOT WATER STORAGE TANKS

WALL-MOUNTED VERTICAL

FLOOR-STANDING

FLOOR-STANDING INDIRECT HEATING

OKC/1m²	HOT WATER STORAGE TANKS	WALL-MOUNTED VERTICAL

- Comes in wall-mounted version
- With a 2.2 kW electrical heating unit
- Ceramic heating element 4 kW on demand
- In version with 1 m² exchanger the storage tank is suitable for boilers using various fuels and for condensing boilers
- 1 wall-mounted console and support for models 100–125; 2 wall-mounted consoles for models 160–200
- Equipped with inlet/outlet for circulation

OKC 100, 125/1 m²

OKC 160/1 m²

OKC 200/1 m²

Type of storage tank		OKC 100/1 m²	OKC 125/1 m²	OKC 160/1 m²	OKC 200/1 m²
Order number model 2,2 kW		1108209101	1103209101	1106209101	1107209101
Order number model 4 kW		1108209103	1103209103	1106209103	1107209103
Capacity	[l]	95	120	147	195
Max. weight of the empty water heater	[kg]	57	64	71	85
Insulation thickness	[mm]	42			
Thermal conductivity of the insulation	[W•m⁻¹•K⁻¹]	0,022			
Power consumption of the el. heating unit	[W]	2200			
Heating time from 10 °C to 60 °C *	[h]	2,5	3,2	3,9	5,2
Electrical connection		1/N/PE ~ 230V/50Hz			
Recommended circuit breaker size	[A]	16			
Degree of protection		IP44			
Max. operating temp. / overpressure in tank	[°C]/[bar]	80/6			
Heat transfer surface of the exchanger *	[m²]	1,08			
Capacity of the exchanger *	[l]	7,1			
Max. operating temperature / overpressure in exchanger	[°C]/[bar]	110/10			
Power of the exchanger at the 720 l at 80 °C	[kW]	24			
Heating time by the exchanger from 10 °C to 60 °C *	[min]	14	17	21	28
Energy efficiency class		B	C		
Static loss	[W]	47	57	67	72

Dimensions [mm]	A	B	C	D	E	F	G	H	I	J	K	R
OKC 100/1 m²	902	612	70	524	622	478	550	270	263	703	172	450
OKC 125/1 m²	1067	612	70	524	789	645	550	268	263	703	172	450
OKC 160/1 m²	1255	612	70	524	991	815	830	254	263	703	172	450
OKC 200/1 m²	1300	672	70	584	804	600	902	490	252	692	172	450

SOCKET no. 1 3/4" outer
SOCKET no. 2 1" outer
SOCKET no. 3 3/4" inner

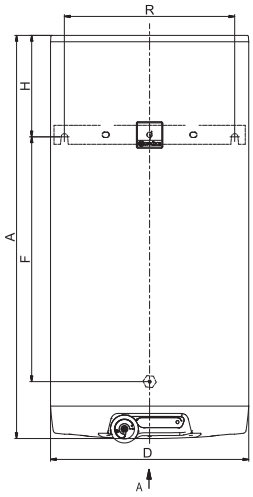

OKC 100–160/1m²

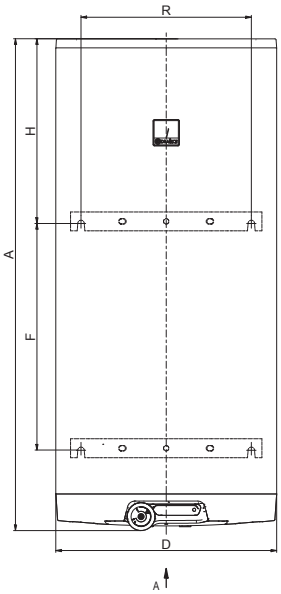

OKC 200/1m²

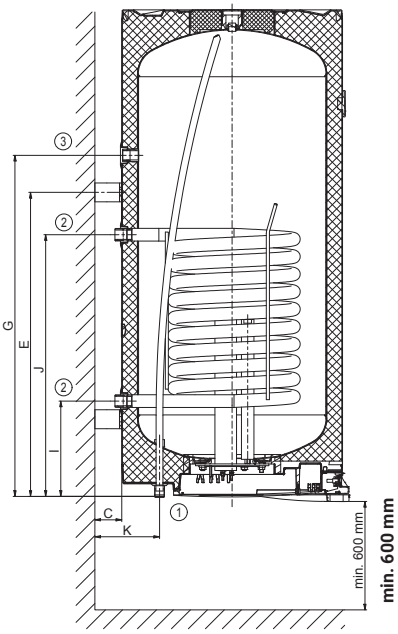

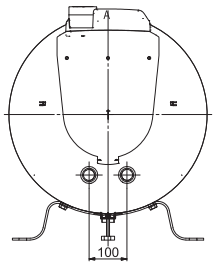

OKC 100–160/1m²

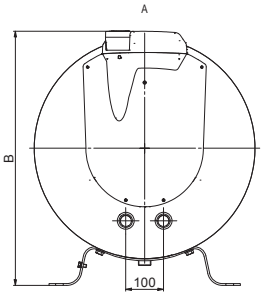

OKC 200/1m²

OKC/1m² 2/6 kW

HOT WATER STORAGE TANKS

WALL-MOUNTED VERTICAL

- Comes in wall-mounted version
- With 2/6 kW heating modes
- Equipped with a rapid water heater
- Can use surplus electricity from solar panels
- Rapid heating can be activated remotely by an external switch
- 1 wall-mounted console and support for model 125; 2 wall-mounted consoles for models 160–200

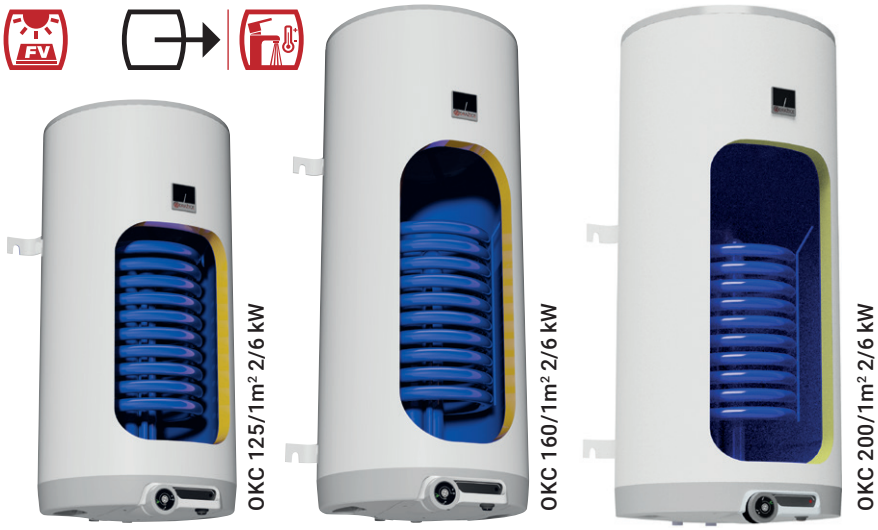

Type of storage tank		OKC 125/1m² 2/6 kW	OKC 160/1m² 2/6 kW	OKC 200/1m² 2/6 kW
Order number		1103209105	1106209105	1107209105
Capacity	[l]	120	147	195
Max. weight of the empty water heater	[kg]	64	71	88
Insulation thickness	[mm]	42		
Thermal conductivity of the insulation	[W•m⁻¹•K⁻¹]	0,022		
Power consumption of the el. heating unit	[W]	2000/6000		
Heating time from 10 °C to 60 °C *	[h]	3,2/1,1	3,9/1,3	5,2/1,7
Electrical connection		3/N/PE ~ 400V/50Hz		
Recommended circuit breaker size	[A]	3 x 16		
Degree of protection		IP44		
Max. operating temp. / overpressure in tank	[°C]/[bar]	80/6		
Heat transfer surface of the exchanger *	[m²]	1,08		
Capacity of the exchanger *	[l]	7,1		
Max. operating temperature / overpressure in exchanger	[°C]/[bar]	110/10		
Power of the exchanger at the 720 l at 80 °C	[kW]	24		
Heating time by the exchanger from 10 °C to 60 °C *	[min]	17	21	28
Energy efficiency class		C		
Static loss	[W]	57	67	72

Dimensions [mm]	A	B	C	D	E	F	G	H	I	J	K	R
OKC 125/1m² 2/6 kW	1067	612	70	524	789	645	550	268	263	703	172	450
OKC 160/1m² 2/6 kW	1255	612	70	524	991	815	830	254	263	703	172	450
OKC 200/1m² 2/6 kW	1300	672	70	584	804	600	902	490	252	692	172	450

SOCKET no. 1 3/4" outer
SOCKET no. 2 1" outer
SOCKET no. 3 3/4" inner

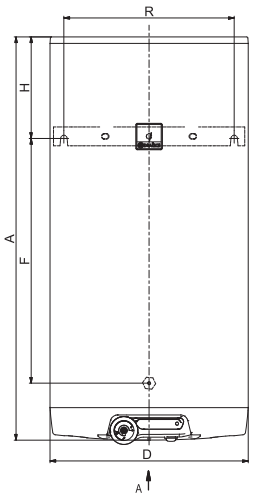

OKC 125–160/1m² 2/6 kW

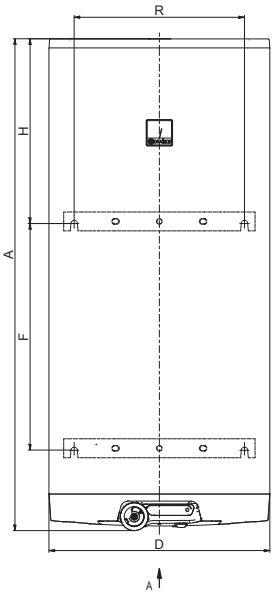

OKC 200/1m² 2/6 kW

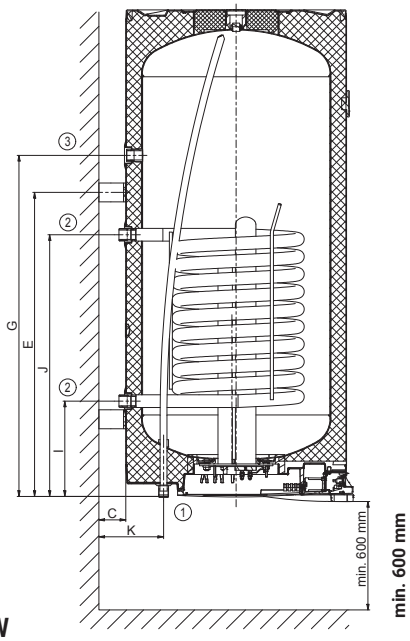

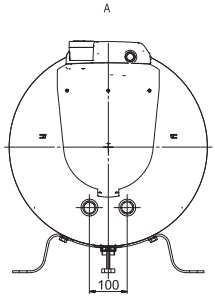

OKC 125–160/1m² 2/6 kW

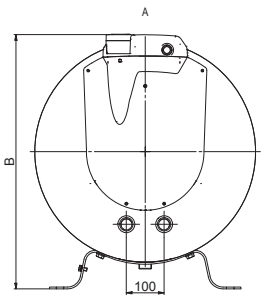

OKC 200/1m² 2/6 kW

OKC NTR/Z

HOT WATER STORAGE TANKS

WALL-MOUNTED VERTICAL

- Comes in wall-mounted version
- Model 80 has 0.41 m² exchanger and other models have 1 m² exchanger
- Suitable for boilers using various fuels and for condensing boilers
- 1 wall-mounted console and support for models 80–125; 2 wall-mounted consoles for models 160–200

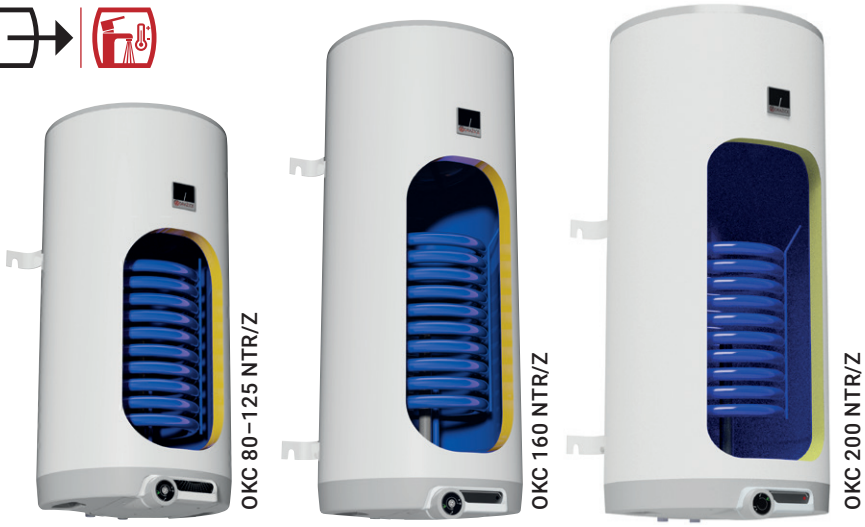

Type of storage tank		OKC 80 NTR/Z	OKC 100 NTR/Z	OKC 125 NTR/Z	OKC 160 NTR/Z	OKC 200 NTR/Z
Order number		1101508101	1108508101	1103508101	1106508101	1107508101
Capacity	[l]	76	95	120	148	196
Max. weight of the empty water heater	[kg]	38	56	61	70	84
Insulation thickness	[mm]	42				
Thermal conductivity of the insulation	[W•m⁻¹•K⁻¹]	0,022				
Electrical connection		1/N/PE ~ 230V/50Hz				
Degree of protection		IP44				
Max. operating temp. / overpressure in tank	[°C]/[bar]	80/6				
Heat transfer surface of the exchanger *	[m²]	0,41	1,08			
Capacity of the exchanger *	[l]	1,8	7,1			
Max. operating temperature / overpressure in exchanger	[°C]/[bar]	110/10				
Power of the exchanger at the 720 l at 80 °C	[kW]	9	24			
Heating time by the exchanger from 10 °C to 60 °C *	[min]	29	14	17	22	28
Energy efficiency class		B		C		
Static loss	[W]	40	47	57	67	72

Dimensions [mm]	A	B	C	D	E	F	G	H	I	J	K	R
OKC 80 NTR/Z	757	612	70	524	605	460	–	142	211	501	172	450
OKC 100 NTR/Z	902	612	70	524	622	478	550	270	263	703	172	450
OKC 125 NTR/Z	1067	612	70	524	789	645	550	268	263	703	172	450
OKC 160 NTR/Z	1255	612	70	524	991	815	830	254	263	703	172	450
OKC 200 NTR/Z	1300	672	70	584	804	600	902	490	252	692	172	450

SOCKET no. 1 3/4" outer
SOCKET no. 2 1" outer
SOCKET no. 3 3/4" inner

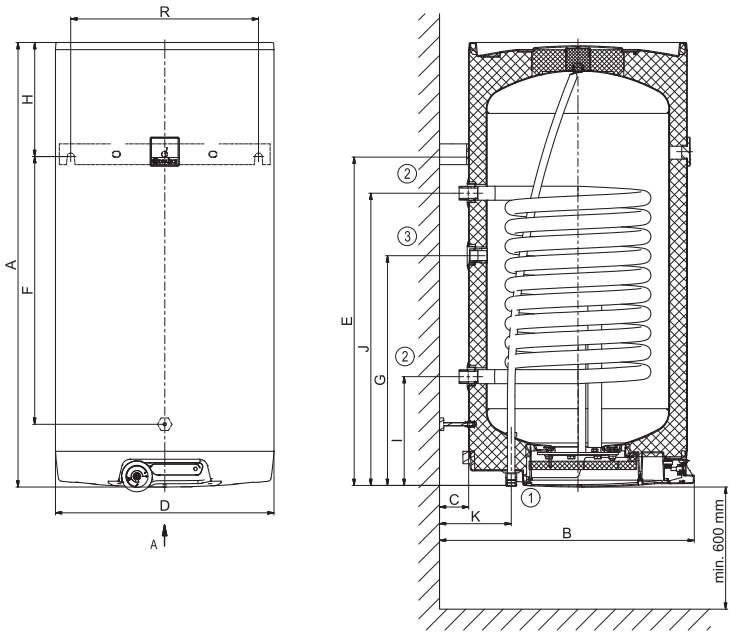

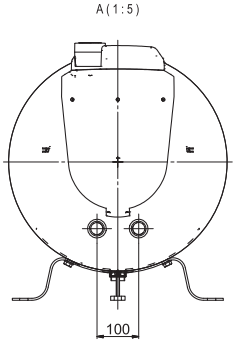

OKC 80–125 NTR/Z

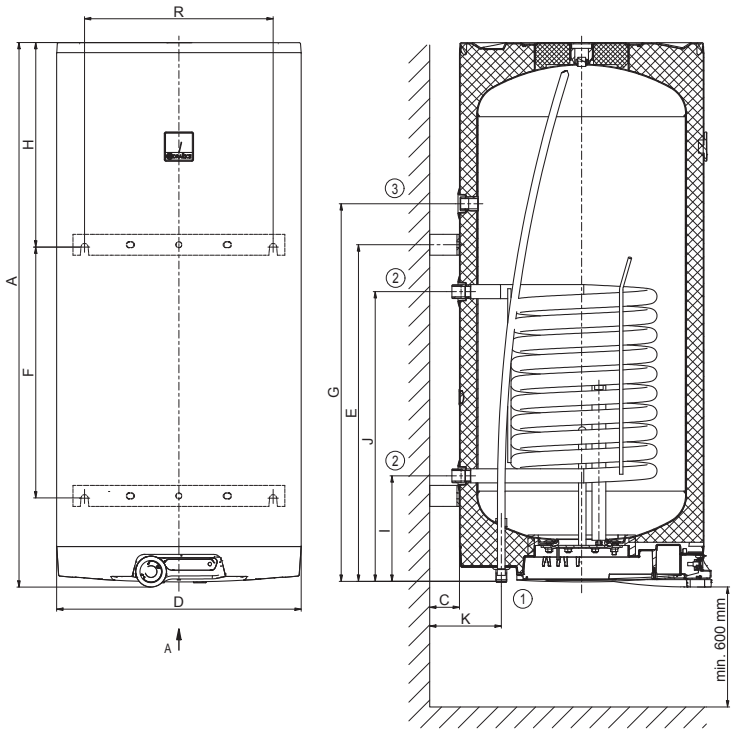

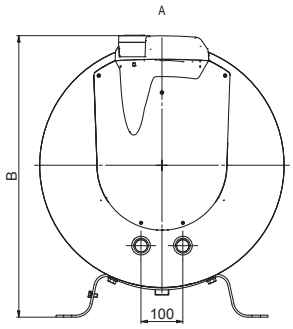

OKC 160–200 NTR/Z

OKCE NTR/HV/2,2 kW

HOT WATER STORAGE TANKS | **FLOOR-STANDING**

- Inlets and outlets of all media through the top lid
- Heaters suitable for installation under wall-mounted boilers
- With a single-phase 2.2 kW electrical heating unit
- Heaters have a fitted drain valved

ENERGY CLASS

A

NEW

Type of storage tank		OKCE 100.1 NTR/HV/ 2,2 kW	OKCE 125.1 NTR/HV/ 2,2 kW
		NEW	NEW
Order number		1108707117	1103707117
Capacity	[l]	83	107
Max. weight of the empty water heater	[kg]	61	77
Insulation thickness	[mm]	72	
Thermal conductivity of the insulation	[W•m^{-1}•K^{-1}]	0,022	
Power consumption of the el. heating unit	[W]	2200	
Heating time from 10 °C to 60 °C *	[h]	2,3	2,8
Electrical connection		1/N/PE ~ 230V/50Hz	
Recommended circuit breaker size	[A]	16	
Degree of protection		IP42	
Max. operating temp. / overpressure in tank	[°C]/[bar]	80/6	
Heat transfer surface of the exchanger *	[m^2]	1,08	1,45
Capacity of the exchanger*	[l]	7,1	9,5
Max. operating temperature / overpressure in exchanger	[°C]/[bar]	110/10	
Power of the exchanger at the 720 l at 80 °C	[kW]	24	32
Heating time by the exchanger from 10 °C to 60 °C *	[min]	13	12
Energy efficiency class		A	
Static loss	[W]	29	33

Dimensions [mm]	A	d	D	E	H	T	U	V
OKCE 100.1 NTR/HV/2,2kW	880	440	584	885	130	119	165	182
OKCE 125.1 NTR/HV/2,2kW	1045	440	584	1050	130	119	165	182

SOCKET no. 1 3/4" outer
SOCKET no. 2 3/4" outer
SOCKET no. 3 3/4" outer
SOCKET no. 4 3/4" outer
SOCKET no. 5 3/4" outer
SOCKET no. 6 1/2" inner

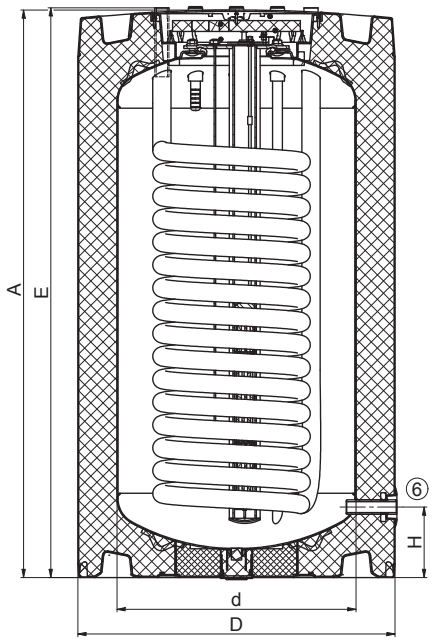

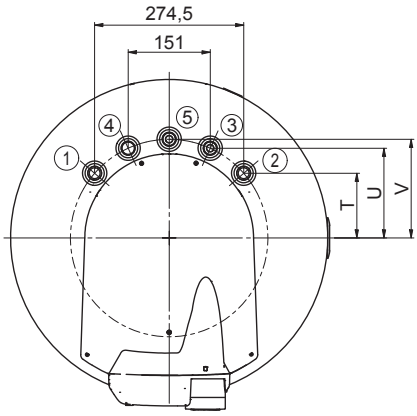

OKCE NTR/2,2 kW

HOT WATER STORAGE TANKS | **FLOOR-STANDING**

- Storage tanks have inlet/outlet for circulation connection
- With a single-phase 2.2 kW electrical heating unit
- Storage tanks have discharge outlet enclosed

Type of storage tank		OKCE 100 NTR/2,2 kW	OKCE 125 NTR/2,2 kW
Order number		1108701101	1103701101
Capacity	[l]	85	110
Max. weight of the empty water heater	[kg]	58	70
Insulation thickness	[mm]	42	
Thermal conductivity of the insulation	[W•m^{-1}•K^{-1}]	0,022	
Power consumption of the el. heating unit	[W]	2200	
Heating time from 10 °C to 60 °C *	[h]	2,2	2,9
Electrical connection		1/N/PE ~ 230V/50Hz	
Recommended circuit breaker size	[A]	16	
Degree of protection		IP42	
Max. operating temp. / overpressure in tank	[°C]/[bar]	80/6	
Heat transfer surface of the exchanger *	[m^2]	1,08	1,45
Capacity of the exchanger*	[l]	7,1	9,5
Max. operating temperature / overpressure in exchanger	[°C]/[bar]	110/10	
Power of the exchanger at the 720 l at 80 °C	[kW]	24	32
Heating time by the exchanger from 10 °C to 60 °C *	[min]	13	12
Energy efficiency class		B	C
Static loss	[W]	42	54

Dimensions [mm]	A	B	D	E	G	H	L	M
OKCE 100 NTR/2,2 kW	902	545	524	892	535	145	195	635
OKCE 125 NTR/2,2 kW	1067	545	524	1057	635	145	195	765

SOCKET no. 1 1" outer
SOCKET no. 2 3/4" inner
SOCKET no. 3 3/4" outer
SOCKET no. 4 1/2" inner

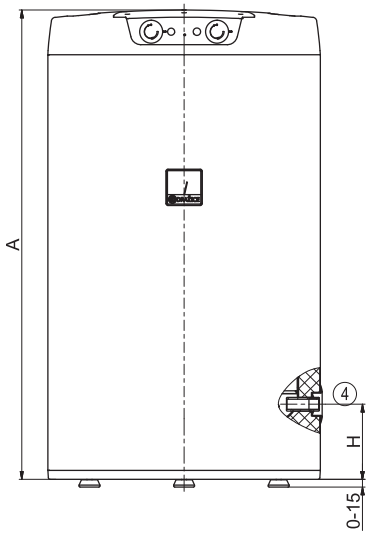

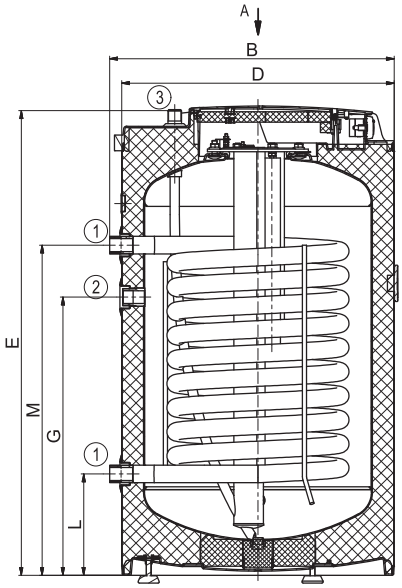

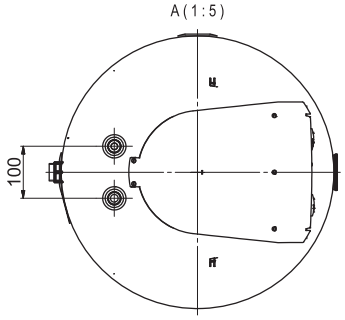

OKC NTR(R)/BP	HOT WATER STORAGE TANKS	FLOOR-STANDING INDIRECT HEATING

- Storage tank has a side flange used as an inspection hole
- TPK electrical heating unit can be installed in side flange
- TJ 6/4" electrical heating unit can be installed for models 200–1000

Type of storage tank		OKC 160 NTR/BP	OKC 200 NTR(R)/BP	OKC 250 NTR(R)/BP	OKC 300 NTR(R)/BP
Order number		1106701101	1107701101 (1107901101)	1109701101 (1109901101)	121070101 (121090101)
Capacity	[l]	148	208 (200)	242 (234)	296 (285)
Max. weight of the empty water heater	[kg]	76	92 (103)	94 (107)	108 (126)
Insulation thickness	[mm]	42			60
Thermal conductivity of the insulation	[W•m⁻¹•K⁻¹]	0,022			0,021
Max. operating temp. / overpressure in tank	[°C]/[bar]	80/6			80/10
Heat transfer surface of the exchanger * (top/bottom)	[m²]	1,45	1,45 (1/1)	1,45 (1/1)	1,5 (1/1,5)
Capacity of the exchanger * (top/bottom)	[l]	9,5	9,5 (7/7)	9,5 (7/9,5)	10,5 (7/10,5)
Max. operating temperature / overpressure in exchanger	[°C]/[bar]	110/10			
Power of the exchanger at the 720 l at 80 °C	[kW]	32	32 (24/24)	32 (24/24)	35 (24/35)
Heating time by the exchanger from 10 °C to 60 °C *	[min]	16	23 (14/14)	26 (14/14)	30 (16/24)
Energy efficiency class		C			
Static loss	[W]	75	82	87	83

Dimensions [mm]	A	B	C	D	E	F	G	I	J	L	M	P
OKC 160 NTR/BP	1045	660	710	584	75	962	645	–	255	205	775	350

SOCKET no. 1 3/4" outer
SOCKET no. 2 1" outer
SOCKET no. 3 3/4" inner
SOCKET no. 4 1/2" inner

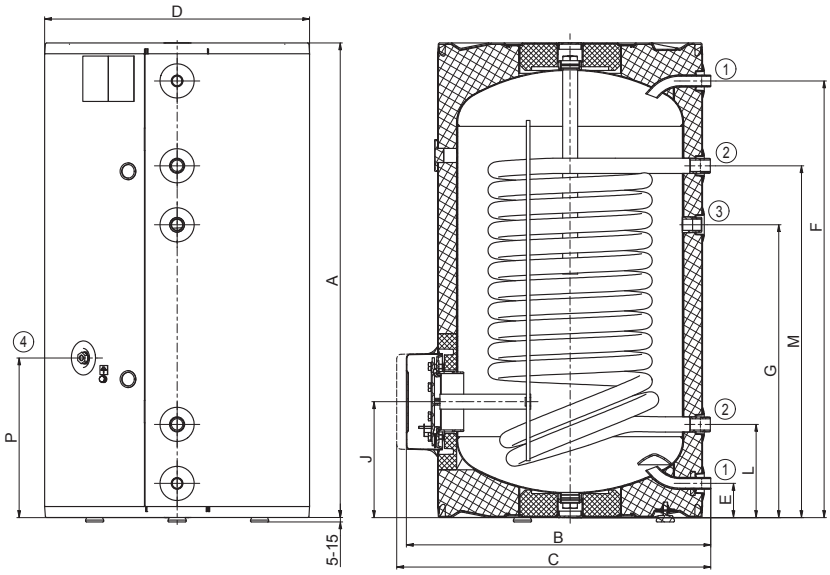

OKC 160 NTR/BP

Rozmery [mm]	A	B	C	D	E	F	G	I	J	L	M	P
OKC 200 NTR/BP	1355	660	710	584	75	1275	945	810	255	205	775	350
OKC 250 NTR/BP	1535	660	710	584	75	1455	1055	810	255	205	775	350

SOCKET no. 1 3/4" outer
SOCKET no. 2 1" outer
SOCKET no. 3 3/4" inner
SOCKET no. 4 1/2" inner
SOCKET no. 5 6/4" inner

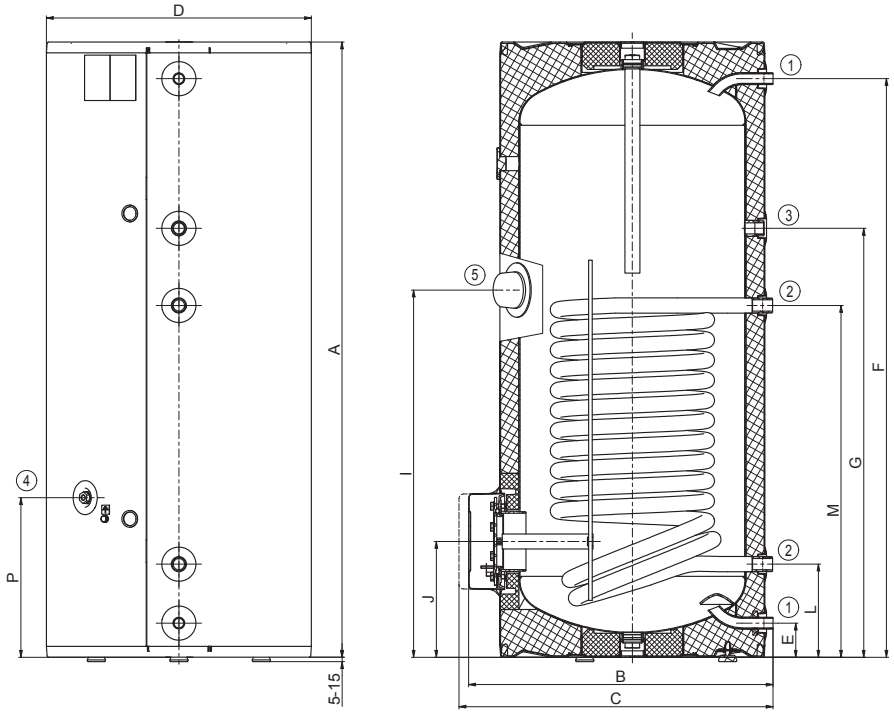

OKC 200, 250 NTR/BP

Dimensions [mm]	A	B	C	D	E	F	G	I	J	L	M	N	O	P	R
OKC 200 NTRR/BP	1355	660	710	584	75	1275	855	675	255	205	645	705	1145	350	915
OKC 250 NTRR/BP	1535	660	710	584	75	1455	1055	675	255	205	645	885	1325	350	1095

SOCKET no. 1 3/4" outer
SOCKET no. 2 1" outer
SOCKET no. 3 3/4" inner
SOCKET no. 4 1/2" inner
SOCKET no. 5 6/4" inner

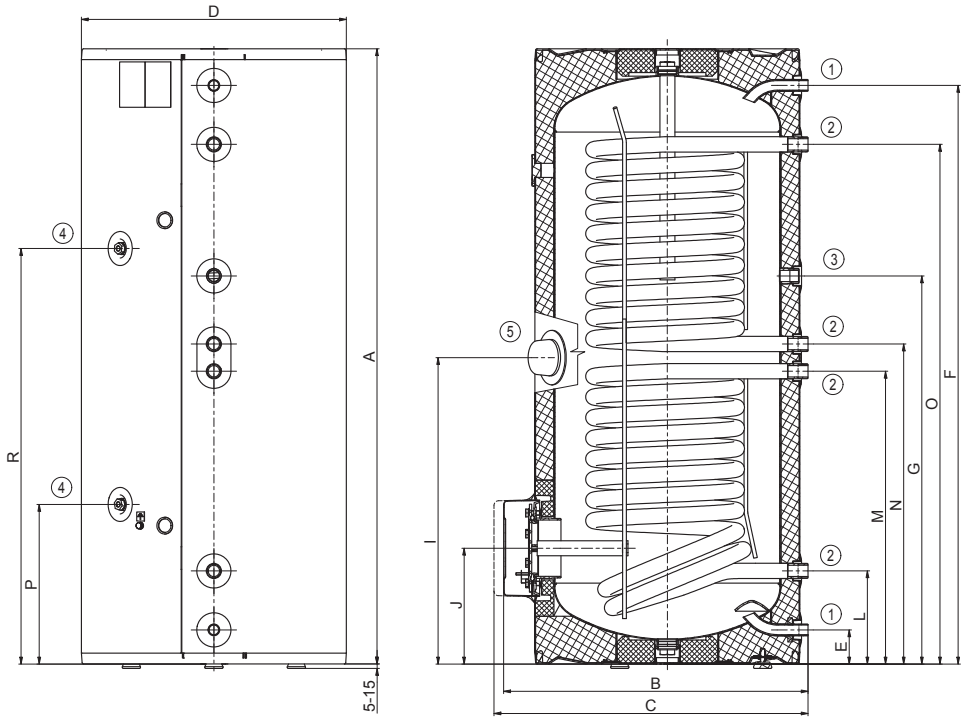

OKC 200, 250 NTRR/BP

OKC NTR(R)/BP	HOT WATER STORAGE TANKS	FLOOR-STANDING INDIRECT HEATING

Dimensions [mm]	A	B	C	D	E	F	G	I	J	L	M	N	O	P	R
OKC 300 NTR/BP	1558	750	810	670	77	1579	760	895	325	330	858	–	–	438	1148
OKC 300 NTRR/BP	1558	750	810	670	77	1579	760	895	325	330	858	939	1291	438	1148

SOCKET no. 1 1" outer
SOCKET no. 2 1/2" inner
SOCKET no. 3 3/4" inner
SOCKET no. 4 6/4" inner

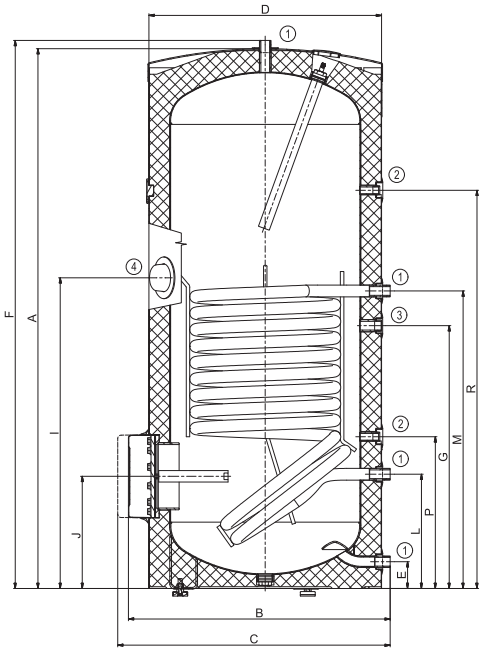

OKC 300 NTR/BP

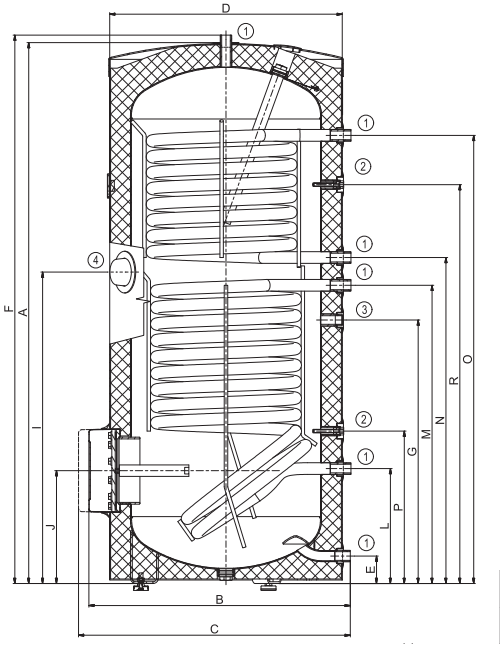

OKC 300 NTRR/BP

OKC NTR(R)/BP | HOT WATER STORAGE TANKS | FLOOR-STANDING INDIRECT HEATING

Type of storage tank		OKC 400 NTR(R)/BP	OKC 500 NTR(R)/BP	OKC 750 NTR(R)/BP	OKC 1000 NTR(R)/BP
Order number		121470101 (121490101)	121370101 (121390101)	105513053 (105513054)	105513055 (105513056)
Capacity	[l]	373 (363)	447 (433)	725 (710)	945 (930)
Max. weight of the empty water heater	[kg]	139 (153)	149 (158)	208 (197)	260 (248)
Insulation thickness	[mm]	50		80	
Thermal conductivity of the insulation	[W•m⁻¹•K⁻¹]	0,021		0,032	
Max. operating temp. / overpressure in tank	[°C]/[bar]	80/10		95/10	
Heat transfer surface of the exchanger * (top/bottom)	[m²]	2 (1/2)	2 (1,4/2)	3,7 (1,17/1,93)	4,5 (1,12/2,45)
Capacity of the exchanger * (top/bottom)	[l]	14 (7/14)	14 (9/14)	32,5 (8,2/13,5)	39 (7,9/17,1)
Max. operating temperature / overpressure in exchanger	[°C]/[bar]	110/10			
Power of the exchanger at the 720 l at 80 °C	[kW]	58 (26/58)	58 (37/58)	–	–
Heating time by the exchanger from 10 °C to 60 °C *	[min]	22 (22/23)	26 (26/27)	24 (28/37)	26 (37/43)
Energy efficiency class		C			
Static loss	[W]	99 (102)	110 (111)	127 (129)	140 (142)

Dimensions [mm]	A	B	C	D	E	F	G	I	J	L	M	N	O	P	R
OKC 400 NTR/BP	1920	750	810	650	79	1799	1194	1005	304	329	944	–	–	514	1289
OKC 500 NTR/BP	1924	800	860	700	55	1790	1264	1040	288	220	965	–	–	380	1409
OKC 400 NTRR/BP	1920	750	810	650	79	1799	1194	1005	304	329	944	1094	1446	514	1289
OKC 500 NTRR/BP	1924	800	860	700	55	1790	1264	1040	288	220	965	1114	1604	380	1409

SOCKET no. 1 1" outer
SOCKET no. 2 3/4" outer
SOCKET no. 3 3/4" inner
SOCKET no. 4 1/2" inner
SOCKET no. 5 6/4" inner

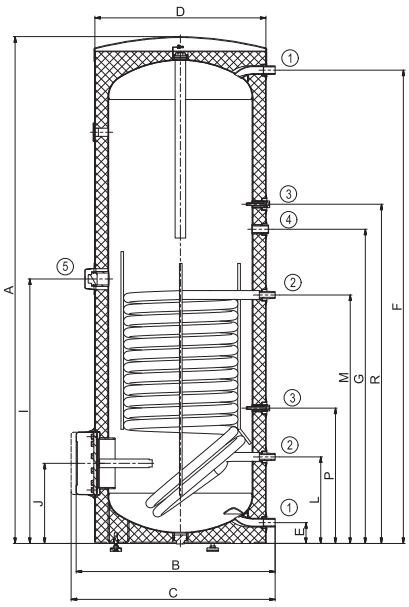

OKC 400, 500 NTR/BP

SOCKET no. 1 1" outer
SOCKET no. 2 3/4" outer
SOCKET no. 3 1/2" inner
SOCKET no. 4 3/4" inner
SOCKET no. 5 6/4" inner

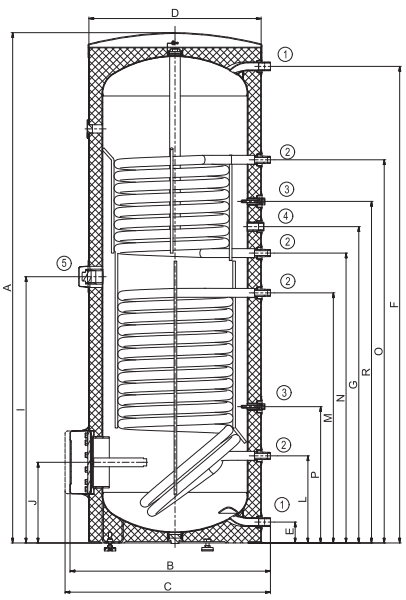

OKC 400, 500 NTRR/BP

Dimensions [mm]	A	B	C	d	D	D3	E	F	G	I	J	L	M	P
OKC 750 NTR/BP	2030	1030	max. 1140	750	910	225	106	1890	1422	1380	383	293	1319	1081
OKC 1000 NTR/BP	2050	1130	max. 1240	850	1010	225	103	1900	1490	1375	386	296	1324	1088

SOCKET no. 1 5/4" outer
SOCKET no. 2 3/4" outer
SOCKET no. 3 6/4" inner
SOCKET no. 4 ∅20 × 2 × 200 inner

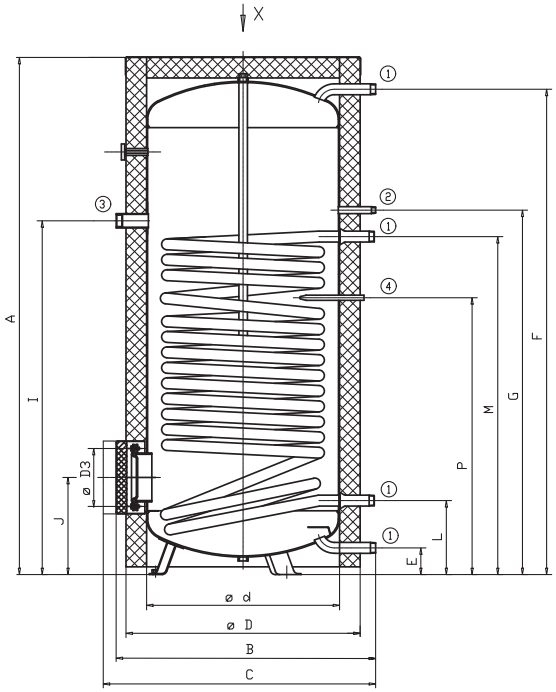

OKC 750, 1000 NTR/BP

Dimensions [mm]	A	B	C	d	D	D3	E	F	G	I	J	L	M	N	O	P	R
OKC 750 NTRR/BP	2030	1030	max. 1140	750	910	225	106	1890	1246	1009	383	293	835	1156	1471	407	1336
OKC 1000 NTRR/BP	2050	1130	max. 1240	850	1010	225	103	1900	1243	1024	386	296	884	1153	1423	411	1333

SOCKET no. 1 1" outer
SOCKET no. 2 3/4" outer
SOCKET no. 3 5/4" outer
SOCKET no. 4 ∅20 × 2 × 200 inner
SOCKET no. 5 6/4" inner

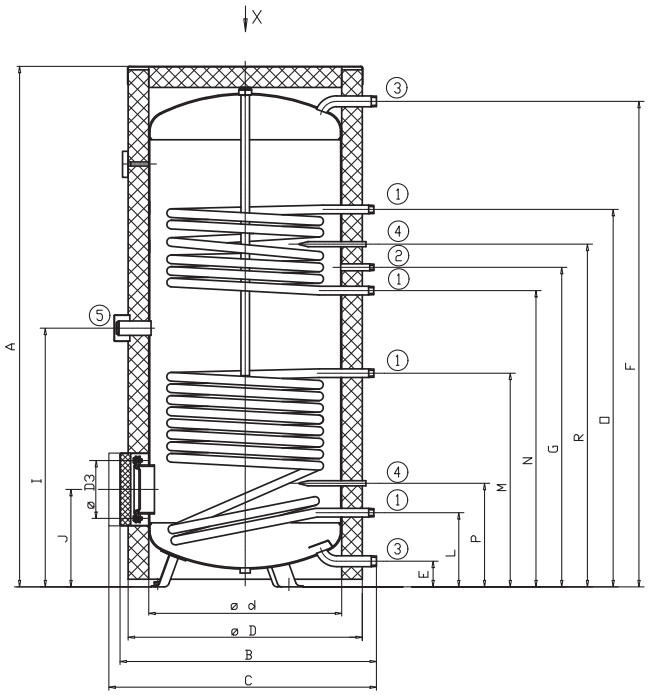

OKC 750, 1000 NTRR/BP

- Two exchangers possible for models from 200 and up
- Service water inlet and outlet through top lid for models 100–160
- Models 100–160 have discharge outlet enclosed

Type of storage tank		OKC 100 NTR	OKC 125 NTR	OKC 160 NTR	OKC 200 NTR(R)	OKC 250 NTR(R)
Order number		1108708101	1103708101	1106708101	1107708101 (1107908101)	1109708101 (1109908101)
Capacity	[l]	87	113	148	208 (200)	242 (234)
Max. weight of the empty water heater	[kg]	53	66	73	88 (102)	92 (104)
Insulation thickness	[mm]	42				
Thermal conductivity of the insulation	[W•m⁻¹•K⁻¹]	0,022				
Electrical connection		1/N/PE ~ 230V/50Hz				
Degree of protection		IP42				
Max. operating temp. / overpressure in tank	[°C]/[bar]	80/6				
Heat transfer surface of the exchanger* (top/bottom)	[m²]	1,08	1,45		1,45 (1/1)	
Capacity of the exchanger* (top/bottom)	[l]	7,1	9,5		9,5 (7/7)	
Max. operating temperature / overpressure in exchanger	[°C]/[bar]	110/10				
Power of the exchanger at the 720 l at 80 °C	[kW]	24	32		32 (24/24)	
Heating time by the exchanger from 10 °C to 60 °C *	[min]	13	12	16	23 (13/25)	26 (14/28)
Energy efficiency class		B	C			
Static loss	[W]	42	54	75	82	87

Dimensions [mm]	A	B	D	E	G	H	L	M
OKC 100 NTR	902	565	524	893	535	145	195	635
OKC 125 NTR	1067	565	524	1058	635	145	195	765
OKC 160 NTR	1255	565	524	1246	897	145	195	765

SOCKET no. 1 3/4" outer
SOCKET no. 2 1" outer
SOCKET no. 3 3/4" inner
SOCKET no. 4 1/2" inner

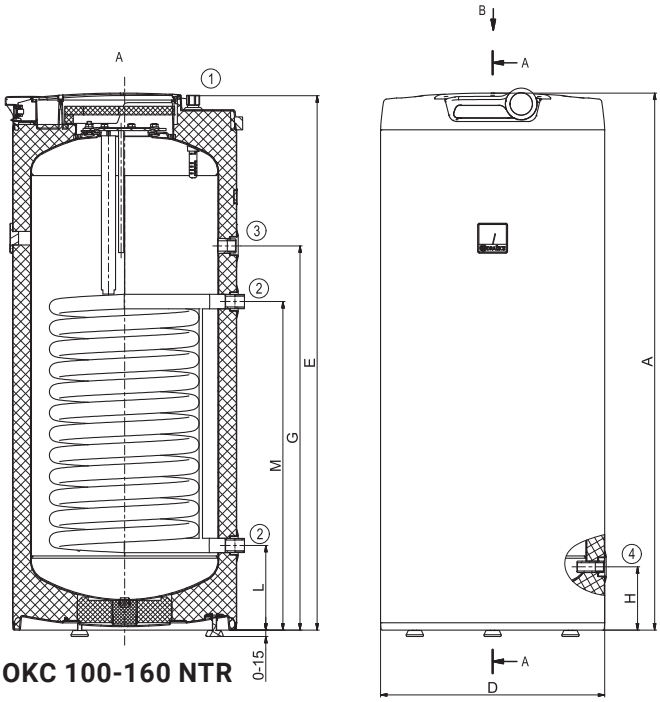

OKC 100-160 NTR

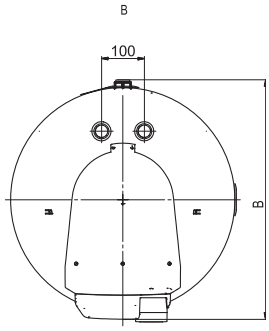

Dimensions [mm]	A	B	D	E	F	G	L	M
OKC 200 NTR	1412	620	584	75	1275	945	205	775
OKC 250 NTR	1595	620	584	75	1455	1055	205	775

SOCKET no. 1 3/4" outer
SOCKET no. 2 1" outer
SOCKET no. 3 3/4" inner

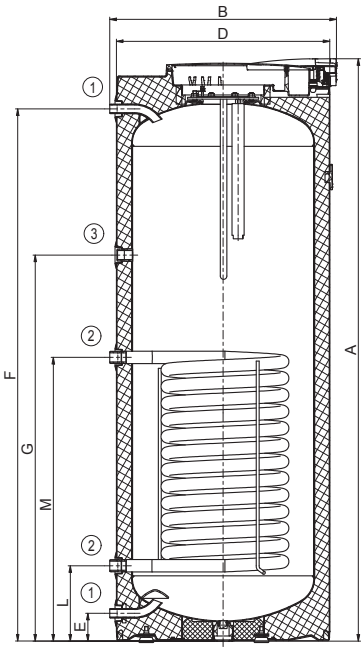

OKC 200, 250 NTR

Dimensions [mm]	A	B	D	E	F	G	L	M	N	O
OKC 200 NTRR	1412	620	584	75	1275	945	205	645	705	1145
OKC 250 NTRR	1595	620	584	75	1455	1055	205	645	885	1325

SOCKET no. 1 3/4" outer
SOCKET no. 2 1" outer
SOCKET no. 3 3/4" inner

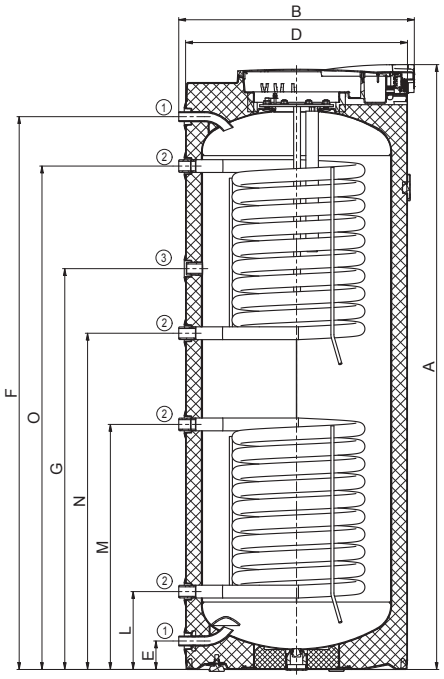

OKC 200, 250 NTRR

OKC NTR/HV | HOT WATER STORAGE TANKS | FLOOR-STANDING INDIRECT HEATING

- Inlets and outlets of all media through the top lid
- Storage tanks suitable for installation under wall-mounted boilers
- Storage tanks have discharge outlet enclosed

OKC 100, 125 NTR/HV

ENERGY CLASS A

NEW

OKC 100.1, 125.1 NTR/HV

NEW

OKC 160 NTR/HV

Type of storage tank		OKC 100 NTR/HV	OKC 100.1 NTR/HV	OKC 125 NTR/HV	OKC 125.1 NTR/HV	OKC 160 NTR/HV
Order number		1108706101	1108707101	1103706101	1103707101	1106706101
Capacity	[l]	87	85	113	111	144
Max. weight of the empty water heater	[kg]	53	56	64	73	77
Insulation thickness	[mm]	42	72	42	72	42
Thermal conductivity of the insulation	[W•m⁻¹•K⁻¹]	0,022				
Electrical connection		1/N/PE ~ 230V/50Hz				
Degree of protection		IP42				
Max. operating temp. / overpressure in tank	[°C]/[bar]	80/6				
Heat transfer surface of the exchanger *	[m²]	1,08	1,08	1,45		
Capacity of the exchanger *	[l]	7,1	7,1	9,5		
Max. operating temperature / overpressure in exchanger	[°C]/[bar]	110/10				
Power of the exchanger at the 720 l at 80 °C	[kW]	24	24	32		
Heating time by the exchanger from 10 °C to 60 °C *	[min]	13	13	12	12	16
Energy efficiency class		B	A	C	A	C
Static loss	[W]	42	29	65	33	65

Dimensions [mm]	A	d	D	E	H	T	U	V
OKC 100 NTR/HV	902	–	524	892	145	119	165	182
OKC 100.1 NTR/HV	880	440	584	885	130	119	165	182
OKC 125 NTR/HV	1067	–	524	1057	145	119	165	182
OKC 125.1 NTR/HV	1045	440	584	1050	130	119	165	182
OKC 160 NTR/HV	1090	–	584	1080	143	119	165	182

SOCKET no. 1 3/4" outer
SOCKET no. 2 3/4" outer
SOCKET no. 3 3/4" outer
SOCKET no. 4 3/4" outer
SOCKET no. 5 3/4" outer
SOCKET no. 6 1/2" inner

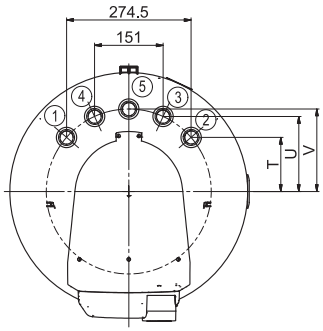

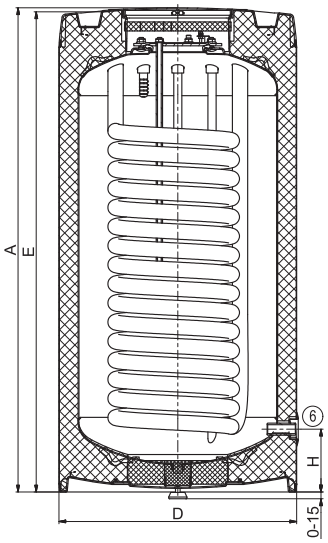

OKC 100, 125, 160 NTR/HV

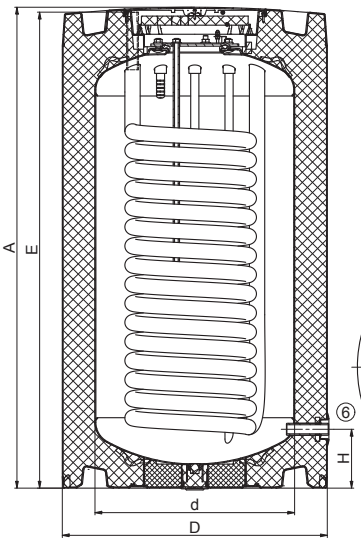

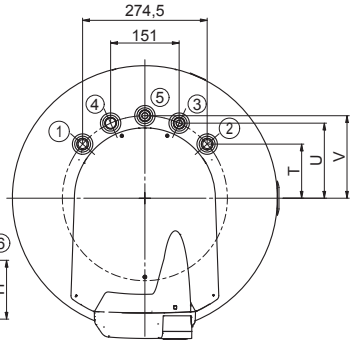

OKC 100.1, 125.1 NTR/HV

OKH NTR/HV	HOT WATER STORAGE TANKS	FLOOR-STANDING INDIRECT HEATING

- Inlets and outlets of all media through the top lid
- Storage tanks suitable for installation under wall-mounted boilers
- Storage tanks have discharge outlet enclosed

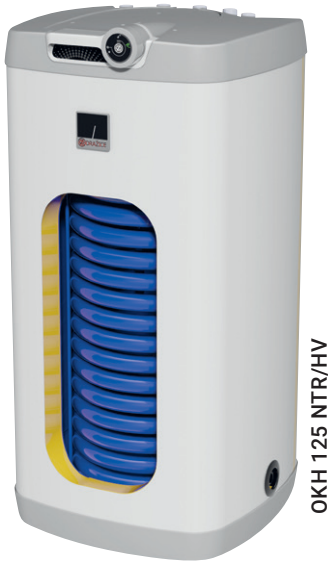

Type of storage tank		OKH 100 NTR/HV	OKH 125 NTR/HV
Order number		140870601	140370601
Capacity	[l]	87	113
Max. weight of the empty water heater	[kg]	55	67
Insulation thickness	[mm]	to 80	
Thermal conductivity of the insulation	[W•m^{-1}•K^{-1}]	0,022	
Electrical connection		1/N/PE ~ 230V/50Hz	
Degree of protection		IP42	
Max. operating temp. / overpressure in tank	[°C]/[bar]	80/6	
Heat transfer surface of the exchanger *	[m^2]	1,08	1,45
Capacity of the exchanger *	[l]	7,1	9,5
Max. operating temperature / overpressure in exchanger	[°C]/[bar]	110/10	
Power of the exchanger at the 720 l at 80 °C	[kW]	24	32
Heating time by the exchanger from 10 °C to 60 °C *	[min]	13	
Energy efficiency class		B	
Static loss	[W]	44	49

Dimensions [mm]	A	D	E	H	T	U	V
OKH 100 NTR/HV	897	520	888	127	119	165	182
OKH 125 NTR/HV	1058	520	1049	127	119	165	182

SOCKET no. 1 3/4" outer
SOCKET no. 2 3/4" outer
SOCKET no. 3 3/4" outer
SOCKET no. 4 3/4" outer
SOCKET no. 5 3/4" outer
SOCKET no. 6 1/2" inner

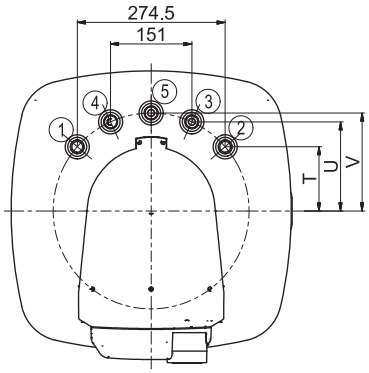

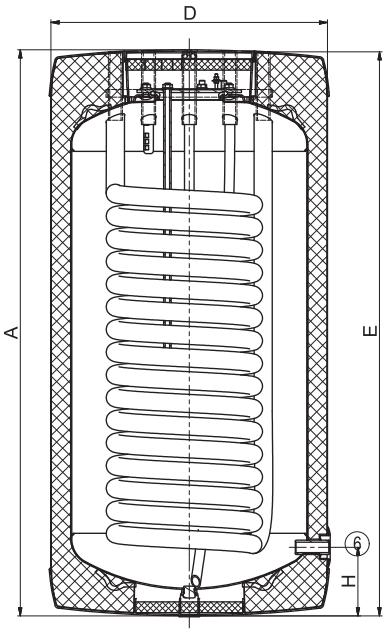

OKH 100, 125 NTR/HV

OKC NTR/HP | HOT WATER STORAGE TANKS | FLOOR-STANDING INDIRECT HEATING

- Working pressure in the vessel and in the heat exchanger is 1 MPa
- With one large heat exchanger for connecting the heating source (heat pump, low-temperature source)
- Installation of TJ 6/4" electrical heating unit possible
- Installation of TPK 150-8/2,2 kW electrical heating unit for OKC 300–500 NTR/HP possible
- Removable insulation for models 750–1000

OKC 250 NTR/HP

OKC 500 NTR/HP

Type of storage tank		OKC 200 NTR/HP	OKC 250 NTR/HP	OKC 300 NTR/HP	OKC 400 NTR/HP	OKC 500 NTR/HP	OKC 750 NTR/HP	OKC 1000 NTR/HP
Order number		1107914101	1109914101	121091401	121491401	121391401	105513051	105513052
Capacity	[l]	208	234	286	352	469	710	930
Max. weight of the empty water heater	[kg]	102	119	133	190	223	259	324
Insulation thickness	[mm]	42		60	50		80	
Thermal conductivity of the insulation	[W•m^{-1}•K^{-1}]	0,022		0,021			0,032	
Max. operating temp. / overpressure in tank	[°C]/[bar]	80/10						
Heat transfer surface of the exchanger *	[m^2]	2,1	2,5	3,2	5,2	6,4	7	9
Capacity of the exchanger *	[l]	13,7	17	21	32	39	47	63
Heating time by the exchanger from 10 °C to 50 °C *	[min]	34		32	26	24	16	
Max. operating temperature / overpressure in exchanger	[°C]/[bar]	110/10						
Energy efficiency class		C						
Static loss	[W]	82	87	72	90	105	130	142

Dimensions [mm]	A	B	C	D	E	F	G	I	J	L	M	P	R	S
OKC 200 NTR/HP	1355	660	710	584	75	1275	855	805	255	205	1145	350	915	645
OKC 250 NTR/HP	1535	660	710	584	75	1455	1055	925	255	205	1325	350	1095	885

SOCKET no. 1 3/4" outer
SOCKET no. 2 1" outer
SOCKET no. 3 3/4" inner
SOCKET no. 4 1/2" inner
SOCKET no. 5 6/4" inner

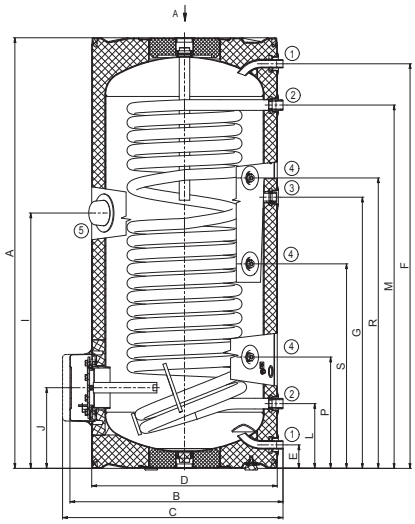

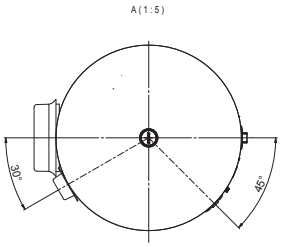

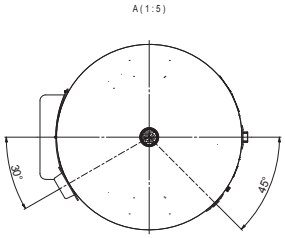

OKC 200 NTR/HP

SOCKET no. 1 3/4" outer
SOCKET no. 2 1" outer
SOCKET no. 3 3/4" inner
SOCKET no. 4 1/2" inner
SOCKET no. 5 6/4" inner

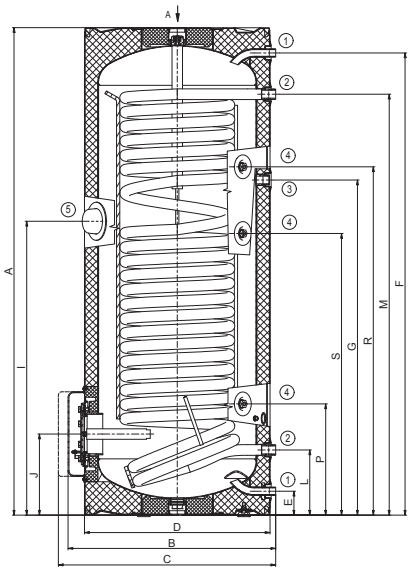

OKC 250 NTR/HP

Dimensions [mm]	A	B	C	D	E	F	G	I	J	L	M	P	R	S
OKC 300 NTR/HP	1558	750	775	670	77	1579	760	895	325	219	1309	438	1148	937

SOCKET no. 1 1" outer
SOCKET no. 2 3/4" inner
SOCKET no. 3 1/2" inner
SOCKET no. 4 6/4" inner

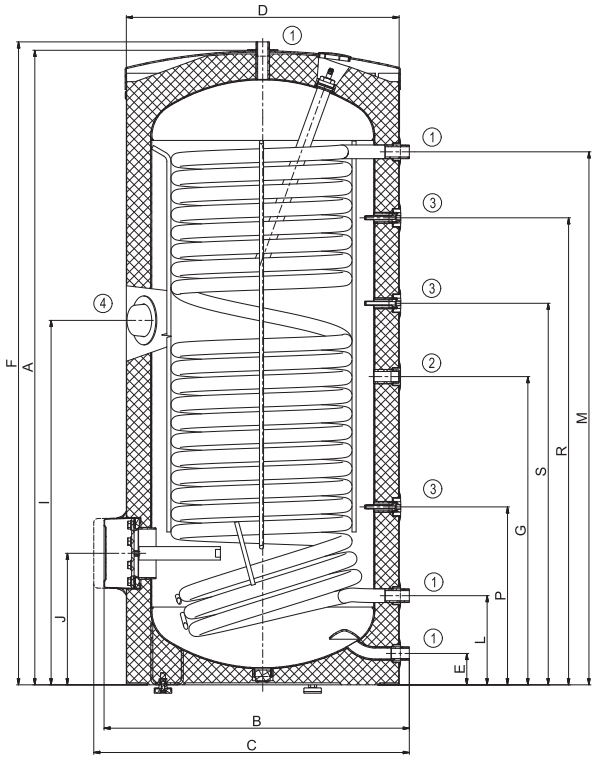

OKC 300 NTR/HP

Dimensions [mm]	A	B	C	D	E	F	G	I	J	L	M	P	R	S
OKC 400 NTR/HP	1644	812	857	700	55	1521	843	1138	288	228	1081	592	1237	956
OKC 500 NTR/HP	1914	812	857	700	55	1790	1023	1310	288	228	1253	592	1409	1128

SOCKET no. 1 1" outer
SOCKET no. 2 3/4" inner
SOCKET no. 3 5/4" inner
SOCKET no. 4 1/2" inner
SOCKET no. 5 6/4" inner

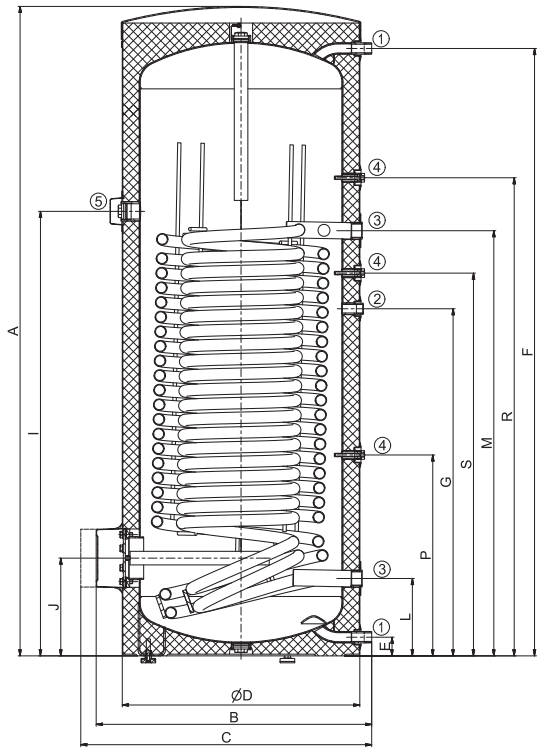

OKC 400, 500 NTR/HP

Dimensions [mm]	A	B	d	D	D3	E	F	G	I	J	K	L	M
OKC 750 NTR/HP	2039	1017	750	950	225	105	1891	1123	1491	383	727	294	1433
OKC 1000 NTR/HP	2053	1117	850	1050	225	105	1905	1173	1547	391	780	301	1483

SOCKET no. 1 5/4" outer
SOCKET no. 2 6/4" inner
SOCKET no. 3 3/4" outer
SOCKET no. 4 5/4" inner

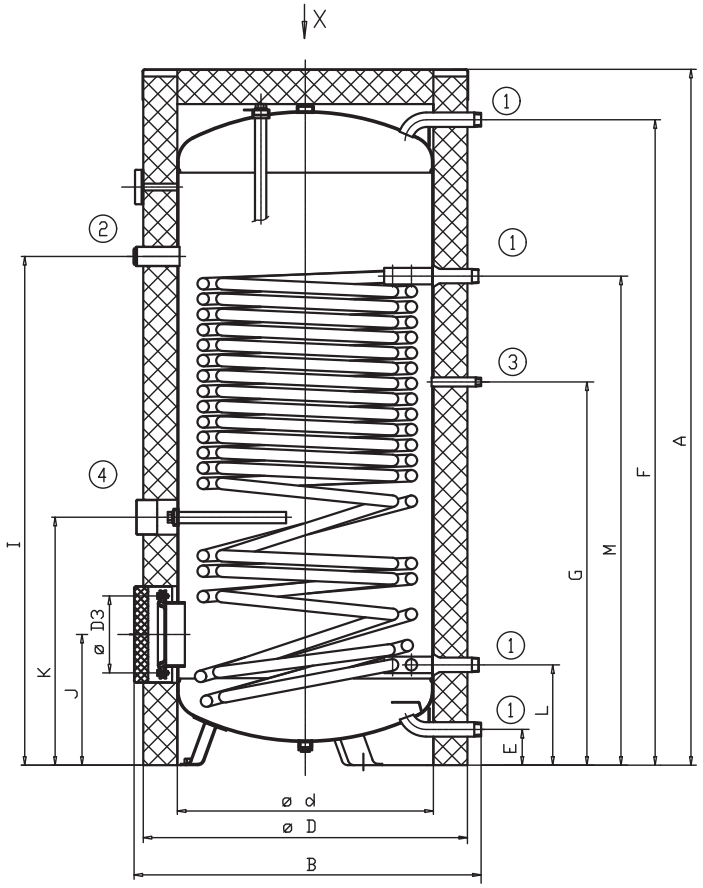

OKC 750, 1000 NTR/HP

OKC NTRR/HP/SOL	HOT WATER STORAGE TANKS	FLOOR-STANDING INDIRECT HEATING

- Working pressure in the vessel and in the heat exchanger is 1 MPa
- With two heat exchangers, the upper large heat exchanger for connection heating sources (heat pump, low-temperature source) and bottom exchanger (eg solar)
- Installation of TJ 6/4" electrical heating nit possible
- Installation of TPK 150-8/2,2 kW electrical heating unit possible
- Storage tank includes 3 sensor pockets

OKC 400 NTRR/HP/SOL

OKC 500 NTRR/HP/SOL

Type of storage tank		OKC 400 NTRR/HP/SOL	OKC 500 NTRR/HP/SOL
Order number		121491402	121391402
Capacity	[l]	352	469
Max. weight of the empty water heater	[kg]	183	233
Insulation thickness	[mm]	50	
Thermal conductivity of the insulation	[W•m^{-1}•K^{-1}]	0,021	
Max. operating temp. / overpressure in tank	[°C]/[bar]	80/10	
Heat transfer surface of the exchanger* (top/bottom)	[m^2]	3,1/1,4	4,8/2
Capacity of the exchanger* (top/bottom)	[l]	19,3/9	29,7/12,3
Max. operating temperature / overpressure in exchanger	[°C]/[bar]	110/10	
Power of the exchanger (ČSN EN 12897)	[kW]	45**/32*	50**/58*
Heating time by the exchanger from 10 °C to 60 °C *	[min]	32/22	26/27
Energy efficiency class		C	
Static loss	[W]	90	105

* measured with heating water 80 °C

** measured with heating water 55 °C

Dimensions [mm]	A	B	C	D	E	F	G	I	J	L	M	N	O	P	R	S
OKC 400 NTRR/HP/SOL	1644	812	857	700	55	1521	973	723	288	208	648	812	1348	523	1073	1173
OKC 500 NTRR/HP/SOL	1914	812	857	700	55	1790	1023	773	288	228	609	818	1618	473	1123	1409

SOCKET no. 1 1" outer
SOCKET no. 2 3/4" inner
SOCKET no. 3 5/4" inner
SOCKET no. 4 1/2" inner
SOCKET no. 5 6/4" inner

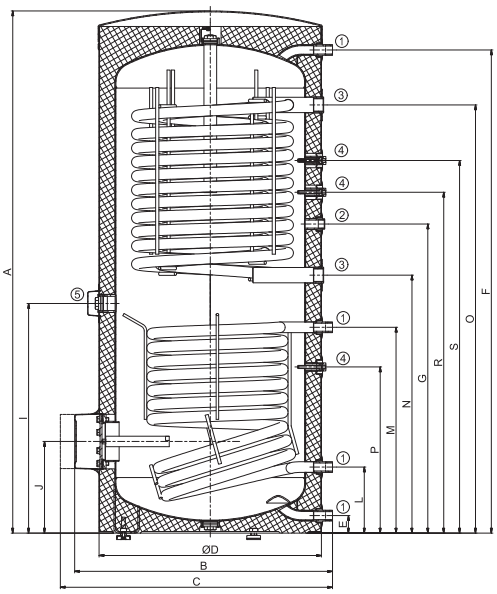

OKC 400 NTRR/HP/SOL

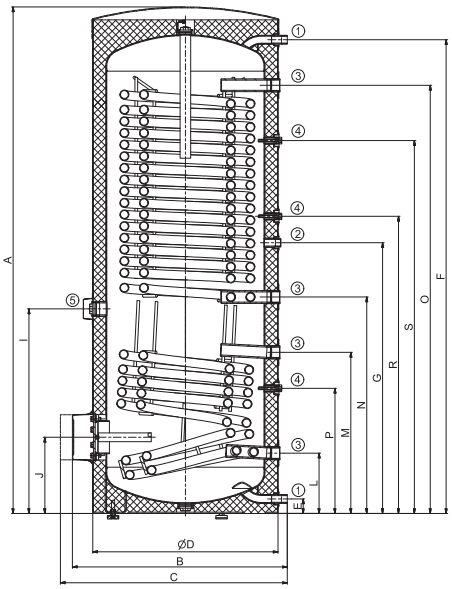

OKC 500 NTRR/HP/SOL

OKC NTRR/SOL

SOLAR HOT WATER STORAGE TANKS

FLOOR-STANDING

- Optimised exchanger surfaces for solar collectors and other sources of power
- Storage tank includes 2 temperature sensor pockets
- Installation of TJ 6/4" electrical heating unit possible
- Better layering of hot water thanks to modified dimensions
- Storage tanks can be used as main water heating storage tank or as pre-heating storage tank before existing hot water storage tank

OKC 200, 250 NTRR/SOL

OKC 300 NTRR/SOL

Type of storage tank		OKC 200 NTRR/SOL	OKC 250 NTRR/SOL	OKC 300 NTRR/SOL
Order number		1107913101	1109913101	121091301
Capacity	[l]	200	242	275
Max. weight of the empty water heater	[kg]	104	109	111
Insulation thickness	[mm]	42		48
Thermal conductivity of the insulation	[W•m^{-1}•K^{-1}]	0,022		0,021
Max. operating temp. / overpressure in tank	[°C]/[bar]	80/10		
Heat transfer surface of the exchanger * (top/bottom)	[m^2]	0,8/0,8	0,8/1	0,8/1,2
Capacity of the exchanger * (top/bottom)	[l]	5,5/5,5	5,5/7	5,5/8,5
Max. operating temperature / overpressure in exchanger	[°C]/[bar]	110/10		
Power of the exchanger at the 720 l at 80 °C (top/bottom)	[kW]	19/19	19/24	19/29
Heating time by the exchanger from 10 °C to 60 °C *	[min]	23/34	26/33	25/33
Energy efficiency class		C		
Static loss	[W]	82	87	85

Dimensions [mm]	A	B	D	E	F	G	I	J	L	M	N	O	P	R
OKC 200 NTRR/SOL	1380	605	584	75	1275	815	665	–	205	515	705	1015	350	915
OKC 250 NTRR/SOL	1560	605	584	75	1455	995	835	–	205	645	885	1195	350	1095
OKC 300 NTRR/SOL	1791	678	600	75	1674	904	948	249	205	754	1014	1322	369	1165

SOCKET no. 1 3/4" outer
SOCKET no. 2 3/4" inner
SOCKET no. 3 1/2" inner
SOCKET no. 4 6/4" inner

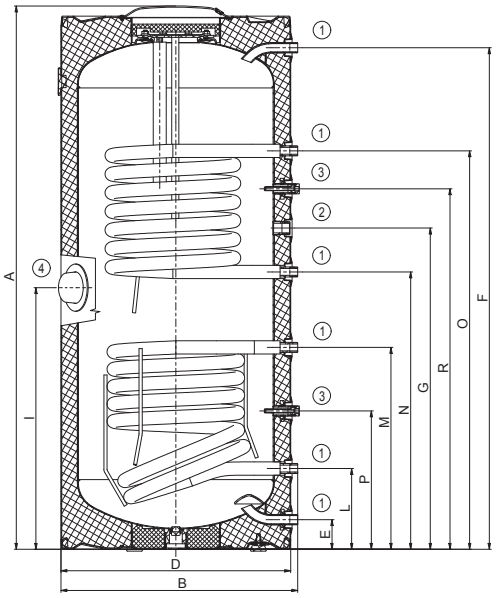

OKC 200, 250 NTRR/SOL

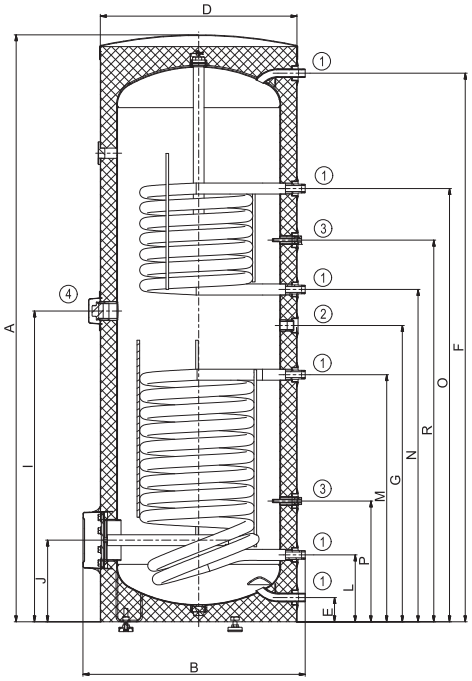

OKC 300 NTRR/SOL

AQUA HP 250/2,2 kW	WATER HEATER WITH HEAT PUMP	FLOOR-STANDING

- Quiet operation, high performance, energy saving
- Water heater enamel container
- Works from –5 °C of ambient temperature
- Temperature 60 °C water also during winter
- Antilegionell function

Technical parameters		AQUA HP 250/2,2 kW
Order number	–	107020001
Capacity	[l]	250
Dimensions (∅ × height)	[mm]	580 × 1970
Max. weight (without water)	[kg]	100
Upper piece	–	nerezová ocel
Bottom part	–	ocelový plech
Insulation thickness (PUR)	[mm]	50
Max. operating temperature / overpressure in tank	[°C] / [bar]	80 / 7
Degree of protection	–	IPx1
Electrical connection	–	1/N/PE ~ 230V/ 50 Hz
Input PP (medium / maximum)	[W]	400 / 700
Power consumption of the el. heating unit	[W]	2200
Thermal output PP	[W]	1800
Fan input	[W]	65
Recomm. circuit breaker value	[A]	16
Max. water temperature from PP	[°C]	60
Max. water temperature from heating unit	[°C]	70
Coolant	type / [kg]	R 134a / 1,2
Heat factor COP *	–	3,61
Heating time *	[h]	5,5
Mixed water V40 *	[l]	323
Air volume flow	[$m^3 \cdot h^{-1}$]	450
Maximum piping length	[m]	40
Range of operating temperatures	[°C]	–5 / 40
Jigger profile	–	XL
Energy efficiency class	–	A+
Energy efficiency	[%]	149
Annual consumption	[kWh]	1251
Noise level	[dB(A)]	51
Function only at low tariffs el. energy	–	ne
SMART function	–	0

* A20/W10-54

AQUA HP 250/2,2 kW	WATER HEATER WITH HEAT PUMP	FLOOR-STANDING

Dimensions [mm]	A	B	C	D	E	F	G	H	I
AQUA HP 250/2,2 kW	1970	99	215	580	706	840	1025	1343	1475

HRDLO č. 1 1" outer
HRDLO č. 2 3/4" outer
HRDLO č. 3 1 1/4" outer
HRDLO č. 4 1/2" inner

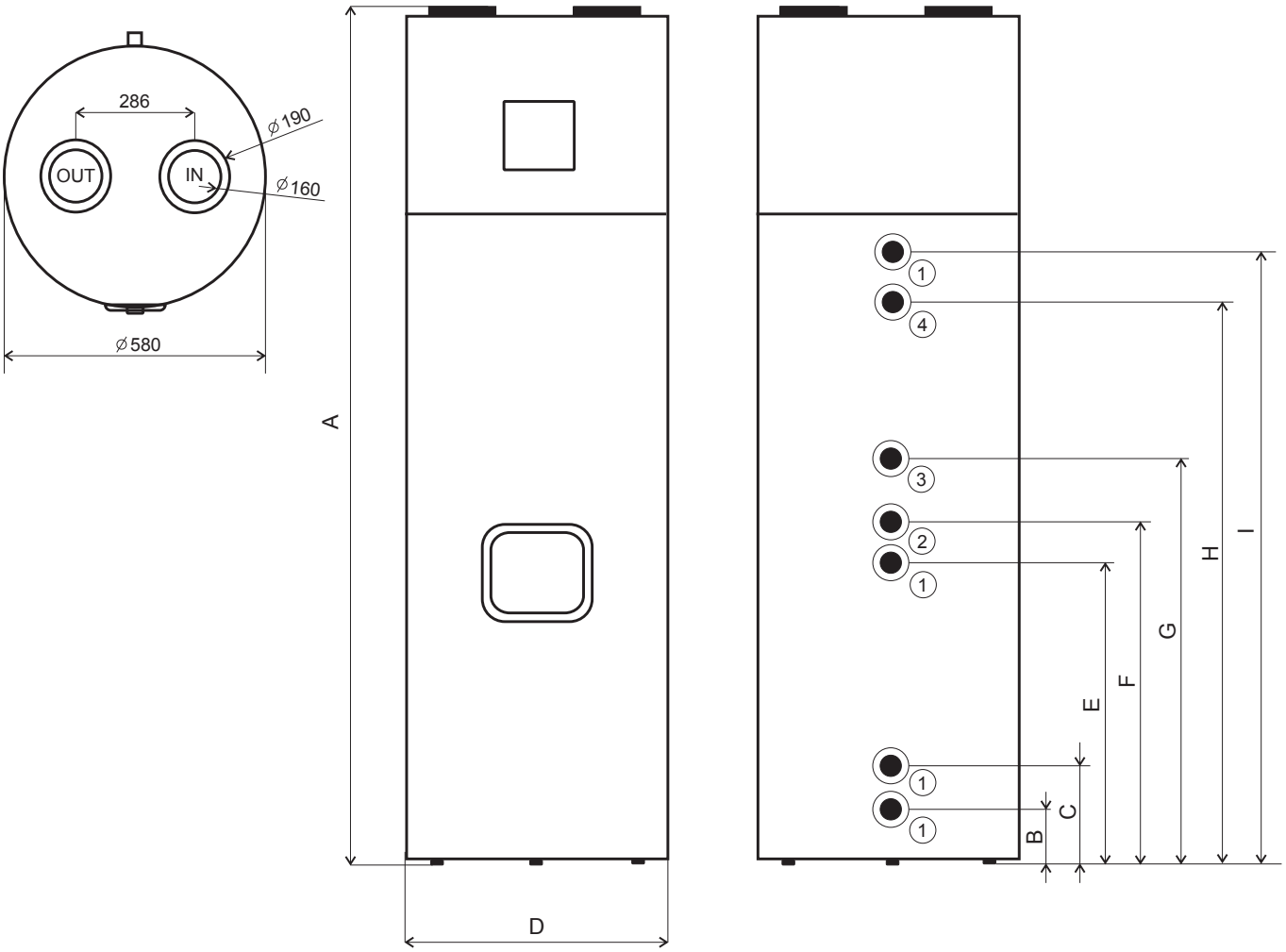

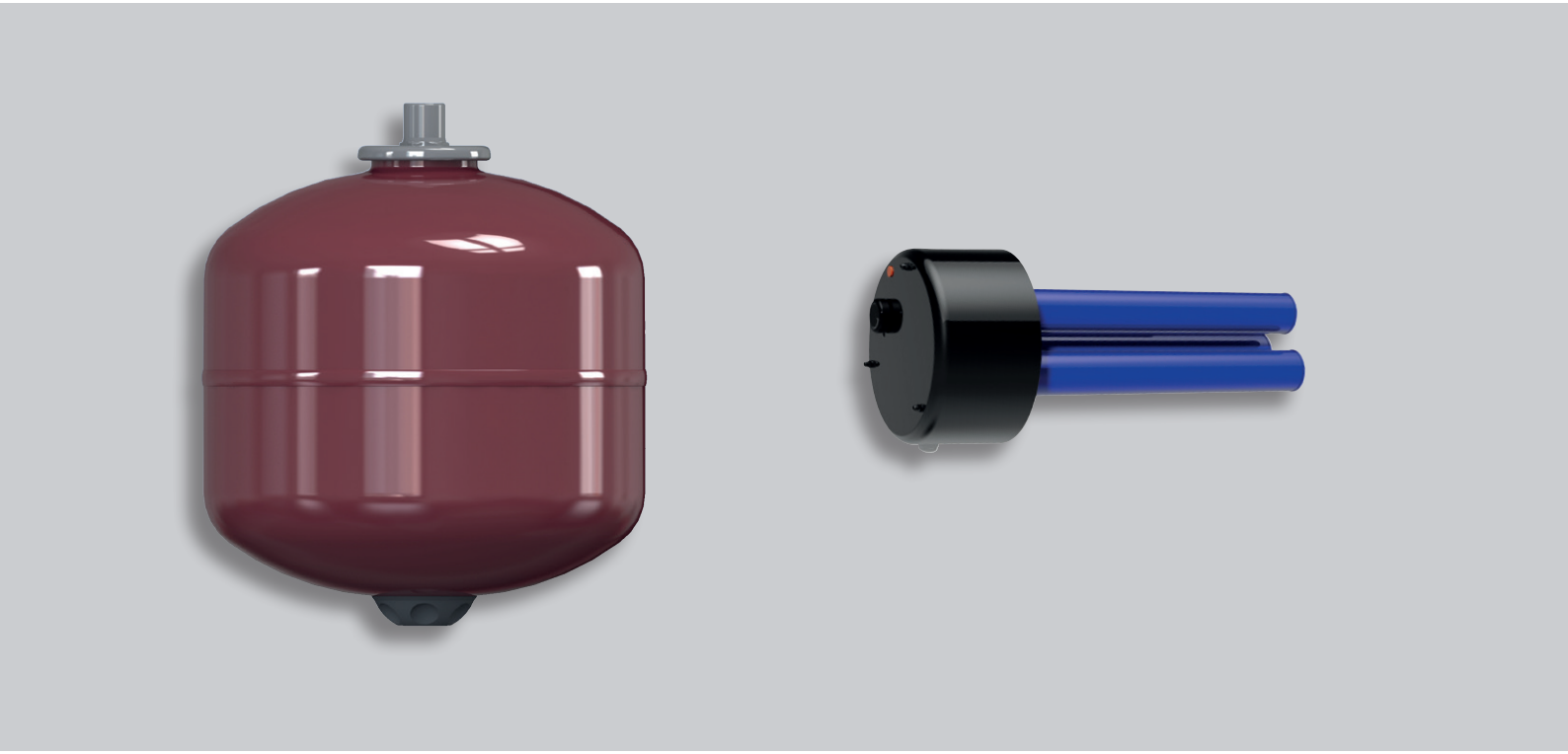

DRAŽICE

ACCESSORIES

ENTS

EXPANSION VESSELS FOR HEATING SYSTEMS

- Suitable for use in heating systems
- It absorbs the volume of water that is created when the heating water temperature rises
- You will especially appreciate its effect at the beginning of the heating season when the heating water temperature can rise very quickly
- It also helps the heating system with the loss of heating water which would be caused by its discharge through the safety valve

Type		ENTS 5/6	ENTS 8/6	ENTS 12/6	ENTS 18/6	ENTS 25/6	ENTS 35/5	ENTS 40/5
Order number	–	105100000	105100001	105100003	105100004	105100006	105100005	105100007
Capacity	[l]	5	8	12	18	25	35	40
Dimensions (∅ × height)	[mm]	160 × 325	200 × 330	270 × 310	270 × 415	290 × 460	320 × 525	320 × 580
Maximum vessel weight (without water)	[kg]	1,61	1,97	2,55	3,26	4,68	5,95	6,15
Max. operating temperature / overpressure in tank	[°C] / [bar]	99/6,0	99/6,0	99/6,0	99/6,0	99/6,0	99/6,0	99/6,0

Type		ENTS 50/6	ENTS 60/6	ENTS 80/6	ENTS 100/6	ENTS 150/6	ENTS 200/6	ENTS 250/6
Order number	–	105100007	105100008	105100009	105100010	105100011	105100012	105100013
Capacity	[l]	50	60	80	100	150	200	250
Dimensions (∅ × height)	[mm]	380 × 620	380 × 670	450 × 650	450 × 730	554 × 810	554 × 988	624 × 1006
Maximum vessel weight (without water)	[kg]	10,8	11,6	13,18	14,9	22,3	26,6	30
Max. operating temperature / overpressure in tank	[°C] / [bar]	99/6,0	99/6,0	99/6,0	99/6,0	99/6,0	99/6,0	99/6,0

ENTV

EXPANSION VESSELS FOR HOT WATER

- Suitable for use in the hot water circuits
- It absorbs the volume of water when heated and protects the system from pressure shocks
- It saves water that would otherwise drain through the safety valve into the sewer
- The materials used are intended for contact with drinking water

Type		ENTV 2/10	ENTV 5/8	ENTV 8/8	ENTV 12/8	ENTV 18/8	ENTV 25/8
Order number	–	105100100	105100101	105100102	105100103	105100104	105100105
Capacity	[l]	2	5	8	12	18	25
Dimensions (∅ × height)	[mm]	125 ×237	160 × 325	200 ×330	270 ×310	270 ×415	290 ×460
Maximum vessel weight (without water)	[kg]	0,86	1,61	1,97	2,55	3,26	4,68
Max. operating temperature / overpressure in tank	[°C] / [bar]	99/10	99/8,0	99/8,0	99/8,0	99/8,0	99/8,0

Type		ENTV 40/8	ENTV 50/10	ENTV 60/10	ENTV 80/10	ENTV 100/10	ENTV 200/10
Order number	–	105100106	105100111	105100107	105100108	105100109	105100110
Capacity	[l]	40	50	60	80	100	200
Dimensions (∅ × height)	[mm]	320 ×580	380 ×620	380 ×670	450 ×650	450 ×730	554 ×988
Maximum vessel weight (without water)	[kg]	6,15	10,8	11,6	13,18	14,9	26,6
Max. operating temperature / overpressure in tank	[°C] / [bar]	99/8,0	99/10,0	99/10,0	99/10,0	99/10,0	99/10,0

IPS ProtectX

IPS - IONIZATION POLARIZATION SYSTEM

Equipment for the physical treatment of water in connection with the reduction of limestone for the protection of household appliances and water distribution systems

ADVANTAGES

- It prolongs the service life of heating equipment and sanitary equipment
- No external power supply
- Maintenance free
- Zero additional costs
- It does not use any chemicals
- Negligible pressure losses
- Patented product
- Certified effectiveness
- Blue line - suitable for all types of water supply, in addition it contains disinfectants, suitable e.g. for untreated water sources
- Red line - suitable for all types of water supply

INDICATIVE DIAGRAM OF THE IPS ProtectX EQUIPMENT LOCATION RED LINE

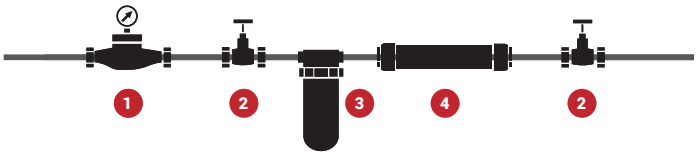

1. Consumption meter
2. Shut-off valve
3. Mechanical dirt filter
4. IPS ProtectX

Order number	TYPE	DIMENSIONS (d × l)	MAXIMUM FLOW
100671000	ProtectX G 1/2" (red line)	50 × 245 mm	1 m^3/h
100671001	ProtectX G 3/4" (red line)	50 × 245 mm	3,2 m^3/h
100671002	ProtectX G 1" (red line)	50 × 251 mm	4 m^3/h
100671003	ProtectX G 1/2" (blue line)	50 × 245 mm	1 m^3/h
100671004	ProtectX G 3/4" (blue line)	50 × 245 mm	3,2 m^3/h
100671005	ProtectX G 1" (blue line)	50 × 251 mm	4 m^3/h

PROTECT CH

MINI CHEMICAL WATER TREATMENT PLANT

Chemical water treatment plant for water that protects pipes and equipment against limescale deposits with a replaceable polyphosphate capsule.

ADVANTAGES:

- Extends the service life of hot water heating appliance
- Installation on cold water supply in horizontal and vertical position
- Replaceable polyphosphate capsule, service life 1 – 2 months
- Maximum flow rate 1 200 l/hr
- The plant does not require a connection to electrical energy

Order Number: 100671022

ORIGINAL PARTS FROM DRAŽICE

SCREW-TYPE ELECTRICAL HEATING UNITS OF THE TJ SERIES

Type		TJ 6/4" -2	TJ 6/4" -2,5	TJ 6/4" S - 2,5	TJ 6/4" -3,3	TJ 6/4" -3,75	TJ 6/4" -4,5	TJ 6/4" -6	TJ 6/4" S -6	TJ 6/4" -7,5	TJ 6/4" -9
Order number L/L1		–/ 2110353	–/ 2110354	– / 2110361	2110355 / –	–/ 2110356	–/ 2110357	–/ 2110358	–/ 2110351	2110362 / 2110359	2110363 / 2110360
Power consumption	[kW]	2	2,5	2,5	3,3	3,75	4,5	6	6	7,5	9
Weight	[kg]	1,2	1,3	1,3	1,7	2	2	2	2	2 / 2,3	2 / 2,3
Extension length L/L1	[mm]	– / 380	– / 405	– / 405	325 / –	– / 450	– / 500	– / 520	– / 520	575 / 685	605 / 690
Electrical connection		1/N/PE ~ 230V/50Hz	1/N/PE ~ 230V/50Hz	1/N/PE ~ 230V/50Hz	3/N/PE ~ 400V/50Hz, ⅄	3/N/PE ~ 400V/50Hz, ⅄	3/N/PE ~ 400V/50Hz, ⅄	3/N/PE ~ 400V/50Hz, ⅄	3/N/PE ~ 400V/50Hz, ⅄	3/N/PE ~ 400V/50Hz, △	3/N/PE ~ 400V/50Hz, △
Recomm.circuit breaker value	[A]	16	16	16	3 x 10	3 x 10	3 x 10	3 x 16	3 x 16	3 x 16	3 x 20
Degree of protection		IP44									
Scale of set temperature	[°C]	5–74									
Heat. timeapprox.150 l 10–60°C	[h]	4,5	4	4	2,7	2,3	2	1,5	1,5	1,3	1

Types TJ 6/4"-2 and TJ 6/4"-2,5 include new flexible supply cable in the socket.

Extension lengths are in a tolerance of ± 10 mm.

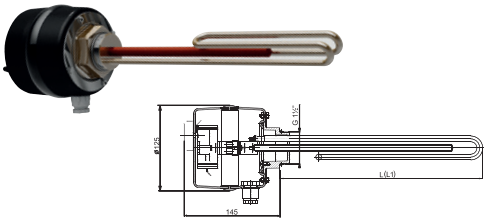

TJ 6/4" S

NEW

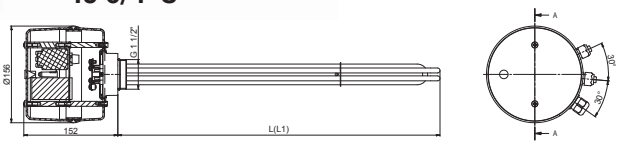

FLANGED ELECTRICAL HEATING UNITS OF THE R, SE SERIES

Type		REU 18-2,5	RDU 18-2,5	RDU 18-3	RDU 18-3,8	RDU 18-5	RDU 18-6	RDW 18-7,5	RDW 18-10	RSW 18-12	RSW 18-15	SE 377	SE 378
Order number		100541551	100541560	100541561	100541562	100541563	100541564	100541570	100541571	100541580	100541581	100541517	100541511
Power consumption	[kW]	2,5	2,5	3	3,8	5	6	7,5	10	12	15	8-11-16	9,5-12,7-19
Weight	[kg]	3	3,3	3,4	3,5	3,5	3,5	3,7	4	4	4,2	8	11,5
Extension length	[mm]	450								530	630	610	740
Electrical connection		1/N/PE ~ 230V/ 50Hz	3/N/PE ~ 400V/ 50Hz, ⅄	3/N/PE ~ 400V/ 50Hz, ⅄	3/N/PE ~ 400V/ 50Hz, ⅄	3/N/PE ~ 400V/ 50Hz, ⅄	3/N/PE ~ 400V/ 50Hz, △	3/N/PE ~ 400V/ 50Hz, △	3/N/PE ~ 400V/ 50Hz, △	3/N/PE ~ 400V/ 50Hz, △	3/N/PE ~ 400V/ 50Hz, △	3/N/PE ~ 400V/ 50Hz, △	3/N/PE ~ 400V/ 50Hz, △
Recomm.circuit breaker value	[A]	16	3 x 6	3 x 6	3 x 10	3 x 10	3 x 16	3 x 16	3 x 20	3 x 20	3 x 25	3 x 25	3 x 32
Degree of protection		IPX4										IP20	
Heat. time approx. 300 l 10–60°C	[h]	8	8	6	5	4	3	2,5	2	1,5	1,3	2-2-1,3	2-1,5-1

Extension lengths are in a tolerance of ± 10 mm.

FLANGED ELECTRICAL HEATING UNITS WITH CERAMIC BODY OF THE TPK SERIES

Type		TPK 150-8/2,2	TPK 168-8/2,2	TPK 210-12/2,2	TPK 210-12/3-6	TPK 210-12/6,6	TPK 210-12/5-9	TPK 210-12/12
Order number		2110409	2110055	2110053	2110050	2110410	2110051	2110414
Power consumption	[kW]	2,2	2,2	2,2	3-4-6*	6,6	5-7-9*	12
Weight	[kg]	4,2	4,2	6,6	12	13	13,6	14
Extension length	[mm]	400	400	440	440	440	550	550
Electrical connection		1/N/PE ~ 230V/50Hz	1/N/PE ~ 230V/50Hz	1/N/PE ~ 230V/50Hz	1/N/PE ~ 230V/50Hz, 3/N/PE ~ 400V/50Hz, ⅄	3/N/PE ~ 3 x 230V/50Hz, ⅄	3/N/PE ~ 400V/50Hz, ⅄	3/N/PE ~ 400V/50Hz, △
Recomm. circuit breaker value	[A]	16	16	16	20/3 x 16	3 x 16	3 x 20	3 x 25
Degree of protection		IP42						
Scale of set temperature	[°C]	5–74						

* – according to connection method

Extension lengths are in a tolerance of ± 10 mm.

ORIGINAL PARTS FROM DRAŽICE

REDUCTION FLANGES

- REU, RDU and RSW electrical heating units can be assembled in the OKCE 160–500 S, OKC 300, 400, 500 BP water heaters using a 210/150 reduction flange.

- REU, RDU, RDW and RSW electrical heating units can be assembled in water heaters with capacities of 750 and 1000 litres using a 225/150 reduction flange.

210/150

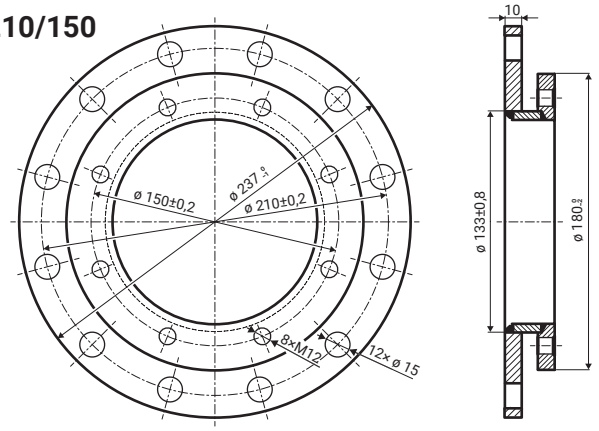

225/150

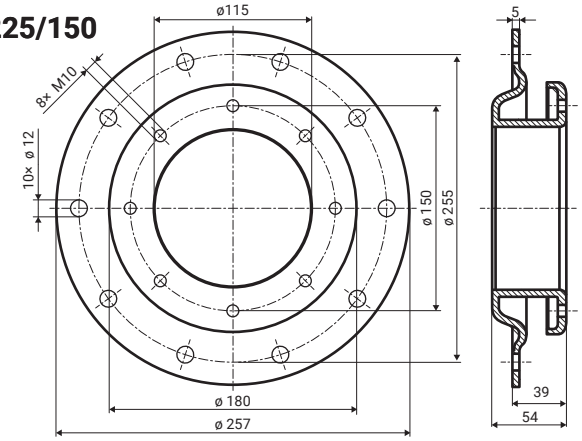

225/210

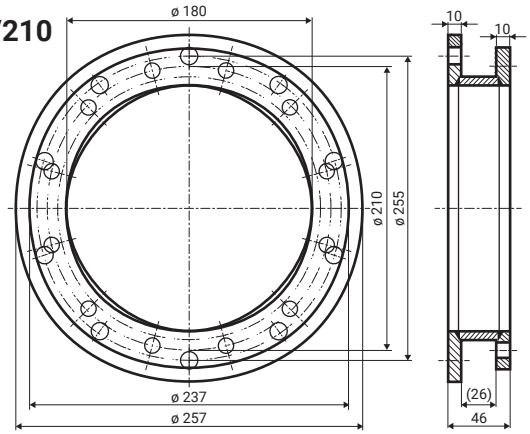

- ETPK 210 - 2.2 kW and TPK 210 - 12/3-6 kW, TPK 210 - 12/5-9 kWand TPK 210 - 12/8-12 kW electrical heating units can be assembled inwater heaterswith capacities of 750 and 1000 litres using a 225/210 reduction flange.

Flange size:	Order number:
210/150	100641134
225/150	100641132
225/210	100641133

COMPOSITION OF SINGLE- AND THREE-PHASE TPK HEATING FLANGE UNITS

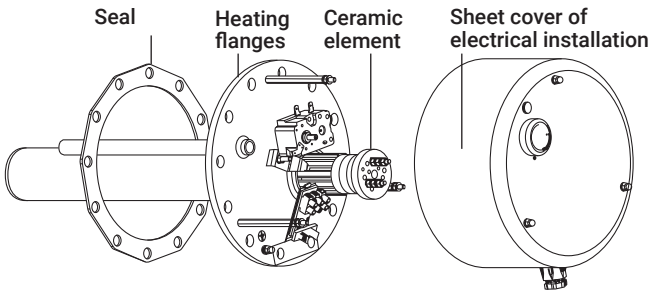

TPK – single-phase

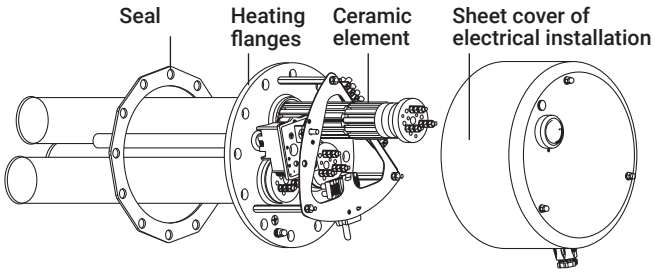

TPK – three-phase

ACCESSORIES TABLES

MOUNTING OPTIONS FOR SCREW-TYPE ELECTRICAL HEATING UNITS OF THE TJ SERIES

Type	TJ 6/4" - 2*	TJ 6/4" - 2,5*	TJ 6/4" S - 2,5*	TJ 6/4" - 3,3	TJ 6/4" - 3,75*	TJ 6/4" - 4,5*	TJ 6/4" - 6*	TJ 6/4" S - 6*	TJ 6/4" - 7,5	TJ 6/4" - 7,5*	TJ 6/4" - 9	TJ 6/4" - 9*
OKCE 200 S	▲	▲	▲	▲	▲	▲	–	–	–	–	–	–
OKCE 250 S	▲	▲	▲	▲	▲	▲	▲	▲	–	–	–	–
OKCE 300 S	▲	▲	▲	▲	▲	▲	▲	▲	–	–	–	–
OKCE 400 S	▲	▲	▲	▲	▲	▲	▲	▲	–	–	–	–
OKCE 500 S	▲	▲	▲	▲	▲	▲	▲	▲	▲	–	▲	–
OKC 200 NTR/BP	▲	▲	▲	▲	▲	▲	▲	▲	–	–	–	–
OKC 200 NTRR/BP	▲	▲	▲	▲	▲	▲	▲	▲	–	–	–	–
OKC 250 NTR/BP	▲	▲	▲	▲	▲	▲	▲	▲	–	–	–	–
OKC 250 NTRR/BP	▲	▲	▲	▲	▲	▲	▲	▲	–	–	–	–
OKC 300 NTR/BP	▲	▲	▲	▲	▲	▲	▲	▲	–	–	–	–
OKC 300 NTRR/BP	▲	▲	▲	▲	▲	▲	–	–	–	–	–	–
OKC 400 NTR/BP	▲	▲	▲	▲	▲	▲	▲	▲	–	–	–	–
OKC 400 NTRR/BP	▲	▲	▲	▲	▲	▲	▲	▲	–	–	–	–
OKC 500 NTR/BP	▲	▲	▲	▲	▲	▲	▲	▲	▲	–	▲	–
OKC 500 NTRR/BP	▲	▲	▲	▲	▲	▲	▲	▲	▲	–	▲	–
OKC 750 NTR/BP	▲	▲	▲	▲	▲	▲	▲	▲	▲	▲	▲	▲
OKC 750 NTRR/BP	▲	▲	▲	▲	▲	▲	▲	▲	▲	▲	▲	▲
OKC 1000 NTR/BP	▲	▲	▲	▲	▲	▲	▲	▲	▲	▲	▲	▲
OKC 1000 NTRR/BP	▲	▲	▲	▲	▲	▲	▲	▲	▲	▲	▲	▲
OKC 200 NTR/HP	▲	▲	▲	▲	–	–	–	–	–	–	–	–
OKC 250 NTR/HP	▲	▲	▲	▲	–	–	–	–	–	–	–	–
OKC 300 NTR/HP	▲	▲	▲	▲	▲	▲	–	–	–	–	–	–
OKC 400 NTR/HP	▲	▲	▲	▲	▲	▲	▲	▲	▲	–	▲	–
OKC 500 NTR/HP	▲	▲	▲	▲	▲	▲	▲	▲	▲	–	▲	–
OKC 750 NTR/HP	▲	▲	▲	▲	▲	▲	▲	▲	▲	▲	▲	▲
OKC 1000 NTR/HP	▲	▲	▲	▲	▲	▲	▲	▲	▲	▲	▲	▲
OKC 400 NTRR/HP/SOL	▲	▲	▲	▲	▲	▲	▲	▲	▲	–	▲	–
OKC 500 NTRR/HP/SOL	▲	▲	▲	▲	▲	▲	▲	▲	▲	–	▲	–
OKC 200 NTRR/SOL	▲	▲	▲	▲	▲	▲	▲	▲	–	–	–	–
OKC 250 NTRR/SOL	▲	▲	▲	▲	▲	▲	▲	▲	–	–	–	–
OKC 300 NTRR/SOL	▲	▲	▲	▲	▲	▲	▲	▲	–	–	–	–

* TJ 6/4" with extended cold part
▲ can be fitted
– cannot be fitted

MOUNTING OPTIONS FOR FLANGED ELECTRICAL HEATING UNITS OF THE R, SE SERIES

Typ	REU 18-2,5	RDU 18-2,5	RDU 18-3	RDU 18-3,8	RDU 18-5	RDU 18-6	RDW 18-7,5	RDW 18-10	RSW 18-12	RSW 18-15	SE 377	SE 378
OKCE 300 S	●	●	●	●	●	●	●	●	●	–	–	–
OKCE 400 S	●	●	●	●	●	●	●	●	●	–	–	–
OKCE 500 S	●	●	●	●	●	●	●	●	●	●	–	–
OKCE 750 S	■	■	■	■	■	■	■	■	■	■	▲	▲
OKCE 1000 S	■	■	■	■	■	■	■	■	■	■	▲	▲
OKC 300 NTR/BP	●	●	●	●	●	●	●	●	–	–	–	–
OKC 300 NTRR/BP	●	●	●	●	●	●	●	●	–	–	–	–
OKC 400 NTR/BP	●	●	●	●	●	●	●	●	–	–	–	–
OKC 400 NTRR/BP	●	●	●	●	●	●	●	●	–	–	–	–
OKC 500 NTR/BP	●	●	●	●	●	●	●	●	–	–	–	–
OKC 500 NTRR/BP	●	●	●	●	●	●	●	●	–	–	–	–
OKC 750 NTR/BP	■	■	■	■	■	■	■	■	■	■	▲	–
OKC 750 NTRR/BP	■	■	■	■	■	■	■	■	■	■	▲	–
OKC 1000 NTR/BP	■	■	■	■	■	■	■	■	■	■	▲	▲
OKC 1000 NTRR/BP	■	■	■	■	■	■	■	■	■	■	▲	▲
OKC 300 NTR/HP	▲	▲	▲	▲	▲	▲	▲	▲	–	–	–	–
OKC 400 NTR/HP	▲	▲	▲	▲	▲	▲	▲	▲	–	–	–	–
OKC 500 NTR/HP	▲	▲	▲	▲	▲	▲	▲	▲	–	–	–	–
OKC 750 NTR/HP	■	■	■	■	■	■	■	■	■	–	–	–
OKC 1000 NTR/HP	■	■	■	■	■	■	■	■	■	■	▲	–

▲ can be fitted
■ can only be fitted with the 225/150 reduction flange
● can only be fitted with the 210/150 reduction flange
– cannot be fitted

MOUNTING OPTIONS FOR FLANGED ELECTRICAL HEATING UNITS OF THE TPK SERIES

Typ	TPK 150-8/ 2,2 kW	TPK 168-8/ 2,2 kW	TPK 210-12/ 2,2 kW	TPK 210-12/ 3-6 kW	TPK 210-12/ 6,6 kW	TPK 210-12/ 5-9 kW	TPK 210-12/ 12 kW
OKCE 160 S	–	–	▲	▲	▲	–	–
OKCE 200 S	–	–	▲	▲	▲	–	–
OKCE 250 S	–	–	▲	▲	▲	–	–
OKCE 300 S	–	–	▲	▲	▲	▲	▲
OKCE 400 S	–	–	▲	▲	▲	▲	▲
OKCE 500 S	–	–	▲	▲	▲	▲	▲
OKCE 750 S	–	–	■	■	■	■	■
OKCE 1000 S	–	–	■	■	■	■	■
OKC 160 NTR/BP	–	▲	–	–	–	–	–
OKC 200 NTR/BP	–	▲	–	–	–	–	–
OKC 200 NTRR/BP	–	▲	–	–	–	–	–
OKC 250 NTR/BP	–	▲	–	–	–	–	–
OKC 250 NTRR/BP	–	▲	–	–	–	–	–
OKC 300 NTR/BP	–	–	▲	▲	▲	–	–
OKC 300 NTRR/BP	–	–	▲	▲	▲	–	–
OKC 400 NTR/BP	–	–	▲	▲	▲	–	–
OKC 400 NTRR/BP	–	–	▲	▲	▲	–	–
OKC 500 NTR/BP	–	–	▲	▲	▲	–	–
OKC 500 NTRR/BP	–	–	▲	▲	▲	–	–
OKC 750 NTR/BP	–	–	■	■	■	■	■
OKC 750 NTRR/BP	–	–	■	■	■	■	■
OKC 1000 NTR/BP	–	–	■	■	■	■	■
OKC 1000 NTRR/BP			■	■	■	■	■
OKC 300 NTR/HP	▲	–	–	–	–	–	–
OKC 400 NTR/HP	▲	–	–	–	–	–	–
OKC 500 NTR/HP	▲	–	–	–	–	–	–
OKC 750 NTR/HP	–	–	■	■	■	■	■
OKC 1000 NTR/HP	–	–	■	■	■	■	■
OKC 400 NTRR/HP/SOL	▲	–	–	–	–	–	–
OKC 500 NTRR/HP/SOL	▲	–	–	–	–	–	–

▲ can be fitted
■ can only be fitted with the 225/210 reduction flange
– cannot be fitted

BOX OF THERMOREGULATION KR

■ Indirect-heating water heaters are equipped with sensor pockets to place the sensor from an external source (solid fuel boiler, solar controller, heat pump, etc.). The KR thermoregulation box can be used in installations which cannot be controlled by a control unit from an external source; the KR box controls the external source or its switching elements (e.g. a three-way valve). The switching temperature can be set at between 5–74 °C. The water heater tank is equipped with sensor pockets with an internal thread of M 12 × 1.5 for the installation of the controllers' sensors.

KR		KR-230 V
Order number		2113000
Voltage	[V]	230

DRAŽICE

ANOTHER ASSORTMENT

PHOTOVOLTAIC

STORAGE TANKS

AIR CONDITION

FV

ACCESSORIES FOR PVE

DZD products ready for use of the power exceed from the PVE

- The cheapest solution for energy storage is to store the energy in to water
- In DZD, we have the know how

More information can be found at www.dzd-fv.cz.

NAD, NADS, NADO, NADOS

STORAGE TANKS

Accumulation tanks for the accumulation of thermal energy from various heat sources.
We manufacture a lot of types of storage tanks for various combinations and types of use.
The basic division is as follows:

- storage tanks without hot water preparation NAD, NADS and UKV
- storage tanks with hot water preparation NADO and NADOS

More information can be found at www.dzd.cz/en/akumulacni-nadrze.

NAD 250 V1

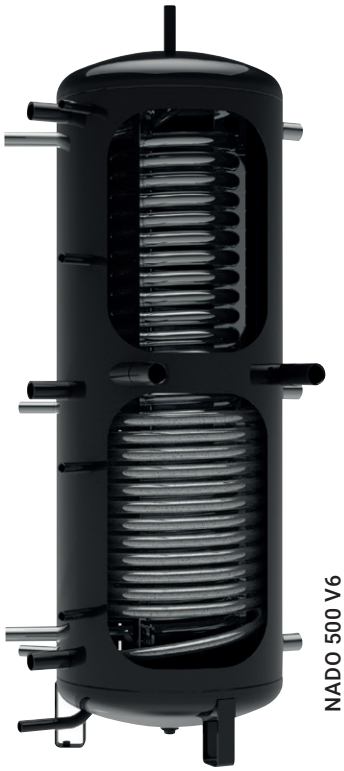

NADO 500 V6

AIR	SPLIT AIR CONDITIONING UNITS

SPLIT AIR is an air conditioner with one indoor unit designed for flats, family houses, offices or smaller facilities.
The air conditioner consists of an outdoor unit, one indoor unit and a smart remote controller.
All three performance variants of the AIR air conditioner offer cooling, heating, a fan and drying functions.

AIR PLUS	MULTISPLIT AIR CONDITIONING UNITS

The Multisplit AIR PLUS air conditioners are designed for systems with a requirement for more indoor units. In this solution, one suitably dimensioned outdoor unit is supplemented by two to four indoor units of identical or different outputs so that the requirements of the project are optimally met.

By combining three types of outdoor units and four types of indoor units, practically any configuration of cooling and heating systems can be achieved exactly according to your needs.

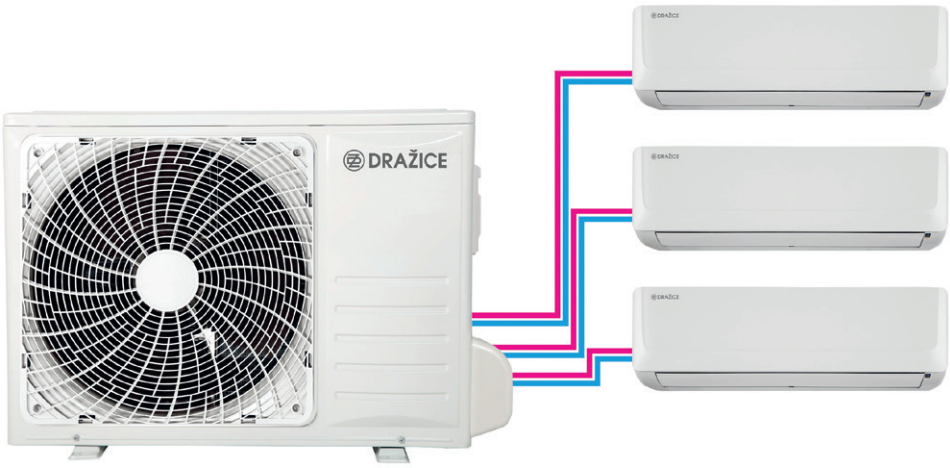

DRUŽSTEVNÍ ZÁVODY DRAŽICE-STROJÍRNA s.r.o.

Dražice 69, 294 71 Benátky nad Jizerou
Czech republic

tel.: +420/326 370 961
e-mail: export@dzd.cz
www.dzd.cz/en
www.dzd-fv.cz/en

PROUD PARTNER OF BUGGYRA Racing

© march/2022 Current version can be found at www.dzd.cz. The manufacturer reserves the right to make changes. Product images are for illustration purposes only. Printing errors are reserved. Models and technical details correspond to the latest state at the time of printing. The manufacturer reserves the right to change the design and details of the price.